UniStream Remote I/O

User Manual

Revision 2.14
June, 2020

Contents

About UniStream® Remote I/O 8
UniStream Remote I/O and Uni-I/O modules 8
Unitronics Remote I/O Models 9
Adapter 9
Digital Inputs 9
Encoder / High Speed Counters Inputs 9
Digital Outputs 9
Relay 10
High Speed Outputs 10
Analog Inputs 12 bit 10
Analog Inputs 16 bit 10
Analog Outputs 12 bit 10
Analog Outputs 16 bit 11
Temperature 11
Load Cell 11
Power 11
Spare Parts 11
Environmental 12
URB-TCP (URB-TCP) – UniStream Remote IO Ethernet Adapter 13
General restrictions 13
Environmental Considerations 13
Dimensions 13
Installation - DIN-Rail Module Mounting 14
How to Remove the Adapter Module from the DIN-Rail 14
How to remove the RTB (Removable Terminal Block) from the I/O module 15
How to connect the I/O modules 15
Specifications 16
Wiring Diagram 17
RJ45 Socket 17
IP Address Setup using BOOTP Server 18
Editing the IP defaults 18
Selecting the IP Configuration Method 18
Configuring IP using Unitronics BOOTP Server 19
LED Indicators 21
MOD (Module Status LED) 21
LINK (Physical Connection LED) 21
ACTIVE (Exchange Data/Traffic Present LED) 21
IOS LED (Extension Module Status LED) 22
Field Power, System Power LED (Field Power, System Power Status LED) 22
URB-TCP2 (URBTC2) – UniStream Remote IO Ethernet Adapter, 6 modules 23
Specifications 23
Wiring Diagram 24

RJ45 Socket 24
IP Address Setup using BOOTP Server 25
Editing the IP defaults 25
Selecting the IP Configuration Method 25
Configuring IP using Unitronics BOOTP Server 26
LED Indicators 28
MOD (Module Status LED) 28
LINK (Physical Connection LED) 28
ACTIVE (Exchange Data/Traffic Present LED) 28
IOS LED (Extension Module Status LED) 29
URD-0800 (DI08) - 8 Digital Inputs (sink or source) 30
1. Wiring Diagram 30
2. LED Indicators 31
URD-1600-8 (DI168) - 16 Digital Inputs (Sink / Source) 32
1. Wiring Diagram 32
2. LED Indicators 33
URD-3200-4 (DI324) - 32 Digital Inputs (Sink / Source) 34
1. Wiring Diagram 34
2. LED Indicators 35
URD-0400B (DI04B) - 4 Digital Inputs 36
1. Wiring Diagram 36
2. LED Indicators 37
URD-0400C (DI04C) - 4 Digital Inputs 38
1. Wiring Diagram 38
2. LED Indicators 39
URD-0200E (DI02E) - 2 High Speed Counters / Encoder Inputs 40
1. Wiring Diagram 40
2. LED Indicators 41
URD-0200D (DI02D) - 2 High Speed Counters / Encoder Inputs 43
1. Wiring Diagram 44
2. LED Indicators 44
URD-02PU (DO02PU) – 2 CH Pulse Output 46
1. Wiring Diagram 47
2. LED Indicators 47
URD-02PW (DO02PW) – 2 CH PWM Output 48
1. Wiring Diagram 48
2. LED Indicators 49
URD-04PW (DO04PW) – 4 CH PWM Output 50
1. Wiring Diagram 50
2. LED Indicators 51
URD-0008CH (DO08CH) - 8 Digital Outputs (Source) 52
1. Wiring Diagram 52
2. LED Indicators 53
URD-0008CI (DO08CI) - 8 Digital Outputs, (Source) 54

1. Wiring Diagram 54
2. LED Indicators 55
URD-0016CG-8 (DO16C8) - 16 Digital Outputs, (Source) 56
1. Wiring Diagram 56
2. LED Indicators 57
URD-0032CG-4 (DO32C4) - 32 Digital Outputs, (Source) 58
1. Wiring Diagram 58
2. LED Indicators 59
URD-0008NH (DO08NH) - 8 Digital Outputs, (Sink) 60
1. Wiring Diagram 60
2. LED Indicators 61
URD-0008NI (DO08NI) - 8 Digital Outputs, (Sink) 62
1. Wiring Diagram 62
2. LED Indicators 63
URD-0016NG-8 (DO16N8) - 16 Digital Outputs, (Sink) 64
1. Wiring Diagram 64
2. LED Indicators 65
URD-0032NG-4 (DO32N4) - 32 Digital Outputs, (Sink) 66
1. Wiring Diagram 66
2. LED Indicators 67
URD-0004RH (DO04RH) - 4 Relay Outputs 68
1. Wiring Diagram 69
2. LED Indicators 69
URD-0004SK (DO04SK) - 4 Solid State Relay 70
1. Wiring Diagram 70
2. LED Indicators 71
URD-0004SM (DO04SM) - 4 Solid State Relay 72
1. Wiring Diagram 72
2. LED Indicators 73
URD-0004SN (DO04SN) - 4 Solid State Relay 74
1. Wiring Diagram 74
2. LED Indicators 75
URA-0400O (AI04O) - 4 Current Inputs 12bit 76
1. Wiring Diagram 76
2. LED Indicators 77
URA-0800O (AI08O) - 8 Current Inputs 12bit 78
1. Wiring Diagram 78
2. LED Indicators 79
URA-1600O-8 (AI16O8) - 16 Analog Current Inputs 12bit 80
1. Wiring Diagram 80
2. LED Indicators 81
URA-0400P (AI04P) - 4 Analog Voltage Inputs 12bit 82
1. Wiring Diagram 82

2. LED Indicators 83
URA-0800P (AI08P) - 8 Analog Voltage Inputs 12bit 84
1. Wiring Diagram 84
2. LED Indicators 85
URA-1600P-8 (AI16P8) - 16 Analog Voltage Inputs 12bit 86
1. Wiring Diagram 86
2. LED Indicators 87
URA-0400T (AI04T) - 4 Analog Current Inputs 16bit 88
1. Wiring Diagram 88
2. LED Indicators 89
URA-0800T (AI08T) - 8 Analog Current Inputs 16bit 90
1. Wiring Diagram 90
2. LED Indicators 91
URA-1600T-8 (AI16U8) - 16 Analog Current Inputs 16bit 92
1. Wiring Diagram 92
2. LED Indicators 93
URA-0400U (AI04U) - 4 Analog Voltage Inputs 16bit 94
1. Wiring Diagram 94
2. LED Indicators 95
URA-0800U (AI08U) - 8 Analog Voltage Inputs 16bit 96
1. Wiring Diagram 96
2. LED Indicators 97
URA-1600U-8 (AI16U8) - 16 Analog Voltage Inputs 16bit 98
1. Wiring Diagram 98
2. LED Indicators 99
URA-0004W (AO04W) - 4 Analog Current Outputs 12bit 100
1. Wiring Diagram 100
2. LED Indicators 101
URA-0008W (AO08W) - 8 Analog Current Outputs 12bit 102
1. Wiring Diagram 102
2. LED Indicators 103
URA-0004X (AO04X) - 4 Analog Voltage Outputs 12bit 104
1. Wiring Diagram 104
2. LED Indicators 105
URA-0008X (AO08X) - 8 Analog Voltage Outputs 12bit 106
1. Wiring Diagram 106
2. LED Indicators 107
URA-0016X-8 (AO16X8) - 16 Analog Voltage Outputs 12bit 108
1. Wiring Diagram 108
2. LED Indicators 109
URA-0004Y (AO04Y) - 4 Analog Current Outputs 16bit 110
1. Wiring Diagram 110
2. LED Indicators 111
URA-0008Y (AO08Y) - 8 Analog Current Outputs 16bit 112

1. Wiring Diagram 112
2. LED Indicators 113
URA-0004Z (AO04Z) - 4 Analog Voltage Outputs 16bit 115
.1 Wiring Diagram 115
2. LED Indicators 116
URA-0008Z (AO08Z) - 8 Analog Voltage Outputs 16bit 117
1. Wiring Diagram 117
2. LED Indicators 118
URA-0016Z-8 (AO16Z8) - 16 Analog Voltage Outputs 16bit 119
.3 Wiring Diagram 119
4. LED Indicators 120
URS-04RT (S04RT) - 4 RTD / Resistance 121
1. Wiring Diagram 122
2. LED Indicators 122
URS-08RT-2 (S08RT2) - 8 RTD / Resistance 123
.1 Wiring Diagram 124
2. LED Indicators 124
URS-04TC (S04TC) - 4 Thermocouple / mV 125
.1 Wiring Diagram 126
2. LED Indicators 126
URS-08TC-2 (S08TC2) - 8 Thermocouple / mV 127
.1 Wiring Diagram 128
2. LED Indicators 129
URS-02LC-8 (S02LC) - 2 CH Load Cell input 130
.1 Wiring Diagram 130
2. LED Indicators 131
URP-PS24V (PS24) - Input 24VDC, Output system Power 5VDC/1A 132
Usage ..... **Error! Bookmark not defined.**
1. Wiring Diagram 132
2. LED Indicators 133
URP-C0V0V (PC00) - 8 0VDC Potential Distribution 134
1. Wiring Diagram 134
2. LED Indicators 135
URP-C24V24V (PC2424) - 8 24VDC Potential Distribution 136
1. Wiring Diagram 136
2. LED Indicators 137
URP-C0V24V (PC024) - 4 24VDC, 4 0VDC Potential Distribution 138
1. Wiring Diagram 138
2. LED Indicators 139
URP-PDIST (PPDIST) - External Universal Power Distribution 140
1. Wiring Diagram 140
2. LED Indicators 141
URP-SHIELD (PSHLD) - External Universal Shield Distribution 143

1. Wiring Diagram 143
2. LED Indicators 144
I/O Module Dimensions 145
1. I/O Module (10RTB) 145
2. I/O Module (18RTB) 145

About UniStream® Remote I/O

This line of remote Ethernet I/O is compatible with UniStream controllers. The line comprises an Ethernet-based Remote I/O adapter and I/O Remote modules.

You configure Remote I/Os in UniLogic, using the Hardware Configuration editor, and connect them to the controller via Ethernet cable

A single UniStream Remote I/O adapter can support up to 63 12mm wide I/O modules. Each adapter comprises two Ethernet ports; this enables users to link an adapter to a controller, and then daisy-chain adapters to support up to 8 adapters per controller, increasing the total number of I/Os supported by a single UniStream.

UniStream Remote I/O offer a broad range of modules; each module offers a different configuration of analog and digital outputs.

Note that the exact number of I/Os that can be included per adapter is dependent on the specific I/O connected to that specific adapter.

The adapter is limited to process 192 data bytes for inputs and 192 data bytes for outputs.

Each digital input/output point process data is 1 bit (minimum 1 byte per module if module data size is less than 8 points) while each analog input/output is 2 bytes (8 inputs/outputs module will be 16 bytes of process data).

UniStream Remote I/O and Uni-I/O modules

You may use both lines in the same application at the same time.

Since the two lines communicate via different protocols and physical connections:

- They work independently of each other
- You can use both lines with the same controller at the same time.

Note that the adapters and modules of each line are **not** interchangeable.

You may only use:

- Uni-Local Expansion Adapters with Uni-I/O modules
- UniStream Remote I/O Adapters with UniStream Remote I/O modules.

Unitronics Remote I/O Models

Adapter

Label	Article	Description	Ethernet Ports	Support Slots	Operating Voltage	Operating temperature
URB-TCP	URB-TCP	UniStream Remote IO Ethernet Adapter	2	Up to 63	24VDC	-40°C to 70°C (-40°F to 158°F) on **0.8A** load -40°C to 60°C (-40°F to 140°F) on **1.5A** load
URB-TCP2	URB-TCP2	UniStream Remote IO Ethernet Adapter, 6 modules		Up to 16	24VDC	-40°C to 60°C (-40°F to 140°F) on **1.0A** load

Digital Inputs

Label	Article	Description	Number of IO
DI08	URD-0800	8 Digital inputs (sink or source), 10 RTB	8
DI168	URD-1600-8	16 Digital Inputs (Sink / Source),18 RTB	16
DI324	URD-3200-4	32 Digital Inputs (Sink / Source),40 IDC	32
DI04B	URD-0400B	4 Digital Inputs,10RTB	4
DI04C	URD-0400C	4 Digital Inputs,10RTB	4

Encoder / High Speed Counters Inputs

Label	Article	Description	Number of IO
DI02E	URD-0200E	2 High Speed Counters / Encoder Inputs, 10RTB	2
DI02D	URD-0200D	2 High Speed Counters / Encoder Inputs, 10RTB	2

Digital Outputs

Label	Article	Description	Number of IO
DO08CH	URD-0008CH	8 Digital Outputs (Source), 10 RTB	8
DO08CI	URD-0008CI	8 Digital Outputs (Source), 10 RTB	8
DO16C8	URD-0016CG-8	16 Digital Outputs, (Source), 18 RTB	16
DO32C4	URD-0032CG-4	32 Digital Outputs, (Source), 40 IDC	32
DO08NH	URD-0008NH	8 Digital Outputs (Sink), 10 RTB	8
DO08NI	URD-0008NI	8 Digital Outputs, (Sink), 10 RTB	8
DO16N8	URD-0016NG-8	16 Digital Outputs, (Sink), 18 RTB	16
DO32N4	URD-0032NG-4	32 Digital Outputs, (Sink), 40 PIN IDC	32

Relay

Label	Article	Description	Number of IO
DO04RH	URD-0004RH	4 Relay, 10 RTB	4
DO04SK	URD-0004SK	4 Solid State Relay, 10 RTB	4
DO04SM	URD-0004SM	4 Solid State Relay, 10 RTB	4
DO04SN	URD-0004SN	4 Solid State Relay, 10 RTB	4

High Speed Outputs

Label	Article	Description	Number of IO
DO02PU	URD-02PU	2CH Pulse Output	2
DO02PW	URD-02PW	2CH PWM Output	2
DO04PW	URD-04PW	4CH PWM Output	4

Analog Inputs 12 bit

Label	Article	Description	Number of IO
AI04O	URA-0400O	4 Analog Current Inputs, 10 RTB	4
AI08O	URA-0800O	8 Analog Current Inputs, 10 RTB	8
AI16O8	URA-1600O-8	16 Analog Current Inputs, 18 RTB	16
AI04P	URA-0400P	4 Analog Voltage Inputs, 10 RTB	4
AI08P	URA-0800P	8 Analog Voltage Inputs, 10 RTB	8
AI16P8	URA-1600P-8	16 Analog Voltage Inputs, 18 RTB	16

Analog Inputs 16 bit

Label	Article	Description	Number of IO
AI04T	URA-0400T	4 Analog Current Inputs, 10 RTB	4
AI08T	URA-0800T	8 Analog Current Inputs, 10 RTB	8
AI16T8	URA-1600T-8	16 Analog Current Inputs, 18 RTB	16
AI04U	URA-0400U	4 Analog Voltage Inputs, 10 RTB	4
AI08U	URA-0800U	8 Analog Voltage Inputs, 10 RTB	8
AI16U8	URA-1600U-8	16 Analog Voltage Inputs, 18 RTB	16

Analog Outputs 12 bit

Label	Article	Description	Number of IO
AO04W	URA-0004W	4 Analog Current Outputs, 10 RTB	4
AO08W	URA-0008W	8 Analog Current Outputs, 10 RTB	8
AO04X	URA-0004X	4 Analog Voltage Outputs, 10 RTB	4
AO08X	URA-0008X	8 Analog Voltage Outputs, 10 RTB	8
AO16X8	URA-0016X-8	16 Analog Voltage Outputs, 18 RTB	16

Analog Outputs 16 bit

Label	Article	Description	Number of IO
AO04Y	URA-0004Y	4 Analog Current Outputs, 10 RTB	4
AO08Y	URA-0008Y	8 Analog Current Outputs, 10 RTB	8
AO04Z	URA-0004Z	4 Analog Voltage Outputs, 10 RTB	4
AO08Z	URA-0008Z	8 Analog Voltage Outputs, 10 RTB	8
AO16Z8	URA-0016Z-8	16 Analog Voltage Outputs, 18 RTB	16

Temperature

Label	Article	Description	Number of IO
S04RT	URS-04RT	4 RTD / Resistance, 10 RTB	4
S08RT2	URS-08RT-2	8 RTD / Resistance, 20 PIN IDC	8
S04TC	URS-04TC	4 Thermocouple / Mv, 10 RTB	4
S08TC2	URS-08TC-2	8 Thermocouple / mV, 20 PIN IDC	8

Load Cell

Label	Article	Description	Number of IO
S02LC	URS-02LC-8	2ch Load Cell input	2

Power

Label	Article	Description
PS24	URP-PS24V	Adapter Additional System Power Expension, 1A
PC00	URP-C0V0V	8 0VDC Potential Distribution
PC2424	URP-C24V24V	8 24VDC Potential Distribution
PC024	URP-C0V24V	4 24VDC, 4 0VDC Potential Distribution
PPDIST	URP-PDIST	External Universal Power Distribution
PSHLD	URP-SHIELD	External Universal Shield Distribution

Spare Parts

Article	Description
URB-END	Adapter End Module
URO-0105	10 Removable Terminal Block For I/O
URO-0106	18 Removable Terminal Block For I/O
URO-0101	10 Removable Terminal Block For Potential Distribution
URO-0102	10 Removable Terminal Block For External Power
URB-END	Adapter End Module

Environmental

Protection	IP20, NEMA1
UL temperature	-20°C to 60°C (-4°F to 140°F)
Storage temperature	-40°C to 85°C (-40°F to 185°F)
Relative Humidity (RH)	5% to 90% (non-condensing)
Shock	IEC 60068-2-27
Vibration	IEC 60068-2-6
Mounting	DIN Rail
Certifications	CE , UL

URB-TCP (URB-TCP) – UniStream Remote IO Ethernet Adapter

General restrictions

- All examples and diagrams are intended to aid understanding, and do not guarantee operation. Unitronics accepts no responsibility for actual use of this product based on these examples.
- Please dispose of this product according to local and national standards and regulations.
- This product should be installed only by qualified personnel.

Environmental Considerations

- Do not install in areas with: excessive or conductive dust, corrosive or flammable gas, moisture or rain, excessive heat, regular impact shocks or excessive vibration, in accordance with the standards and limitations given in the product's technical specification sheet.
- Do not place in water or let water leak onto the unit.
- Do not allow debris to fall inside the unit during installation.
- Install at maximum distance from high-voltage cables and power equipment.

Dimensions

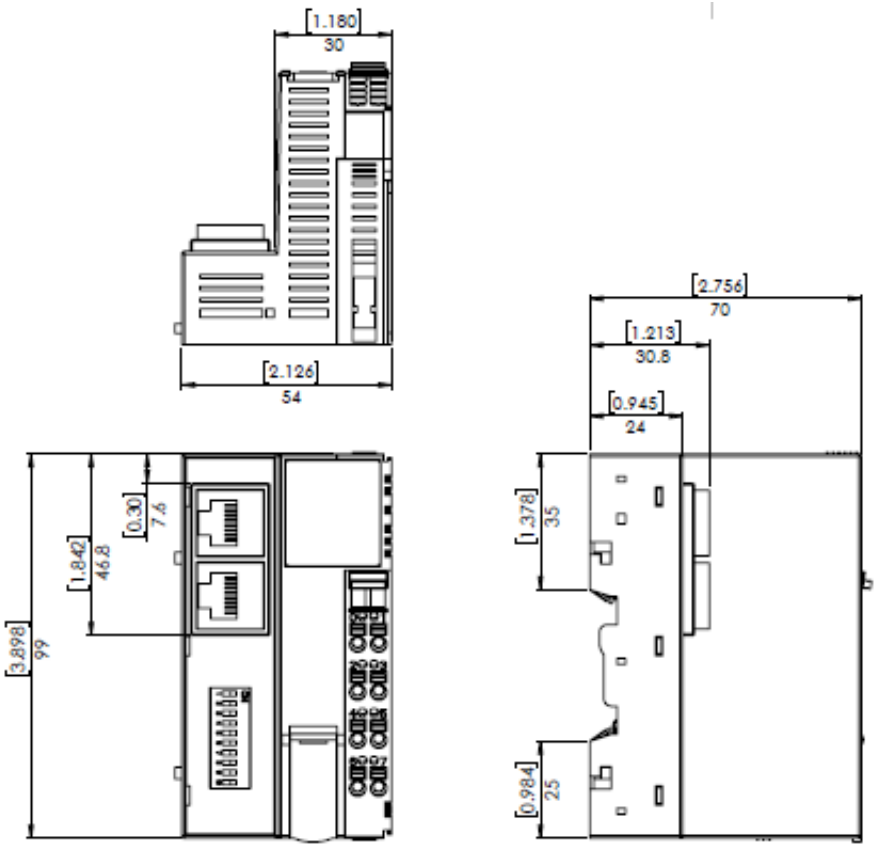

Installation - DIN-Rail Module Mounting

1. Press down the module lightly on the DIN rail until the lower ridge click onto the rail.

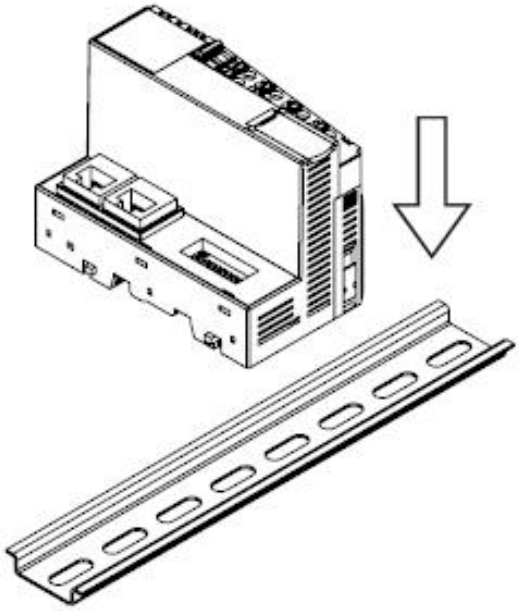

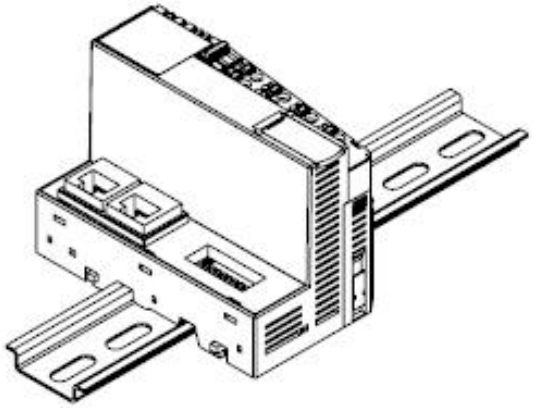

How to Remove the Adapter Module from the DIN-Rail

1. Pull the white locking latch.

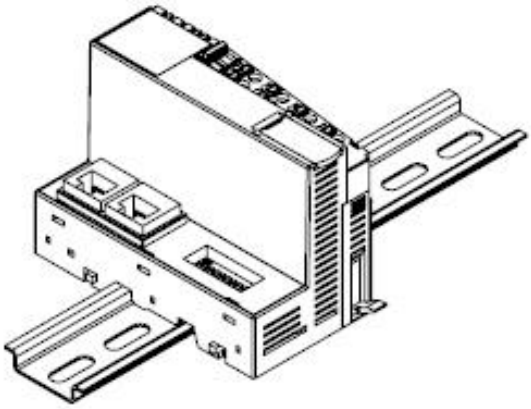

2. Pull the module off the rail.

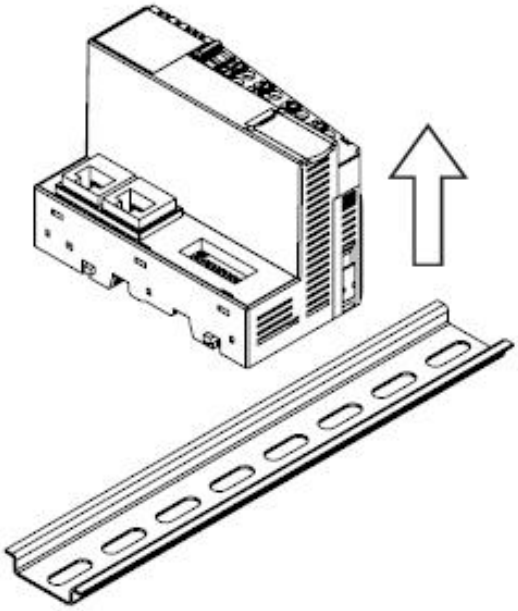

How to remove the RTB (Removable Terminal Block) from the I/O module

1. Pull out the plastic belt from the RTB.

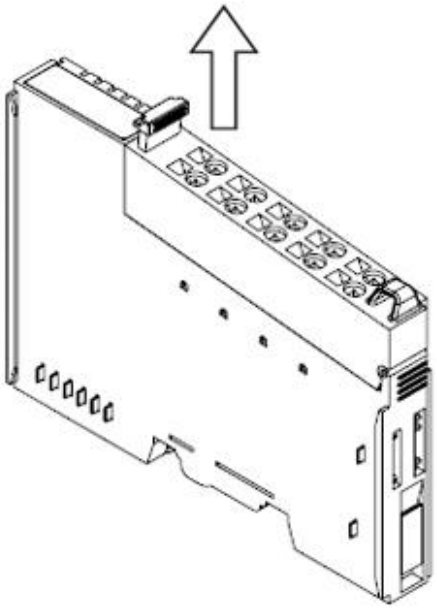

2. Apply more force until the I/O module is pulled away from the I/O module.

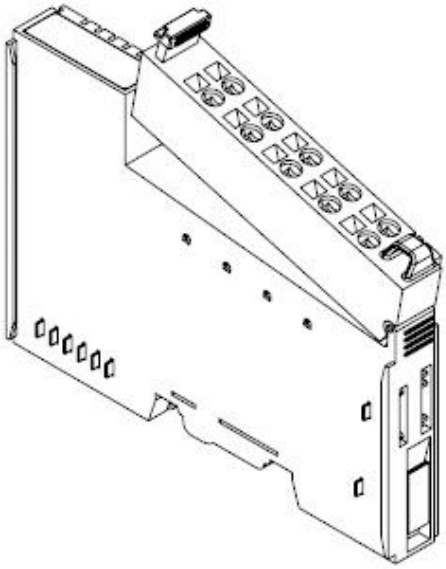

How to connect the I/O modules

1. Line up the grooves on the module with the grooves on the adapter (if it is the first module) or on the adjacent module, and slide the module into place as shown in the next image.

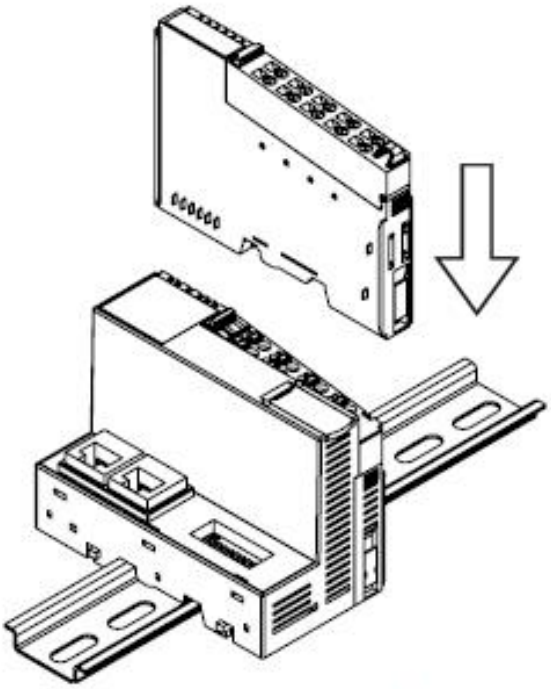

Specifications

Items	Specification
Max. Expansion Module	Up to 63 slots The adapter is limited to process 192 data bytes for inputs and 192 data bytes for outputs. Each digital input/output point process data is 1 bit (minimum 1 byte per module if module data size is less than 8 points) while each analog input/output is 2 bytes (8 inputs/outputs module will be 16 bytes of process data).
Max Length Bus Line	Up to 100m from Ethernet Hub/Switch with twisted CAT5 UTP/STP
Max. Nodes	Limited by Ethernet Specification.
Baud Rate	10/100Mbps, Auto-negotiation, Full duplex
Interface Connector	2 ports, RJ-45 socket
IP-Address Setup	DIP Switch or DHCP/BOOTP
IP-Address Range	xxx.xxx.xxx.1 ~ 253 (User area) xxx.xxx.xxx.254 ~ 255 (Reserved for IAP Function)
Indicator	6 LEDs 1 Green/Red, Module Status (MOD) 1 Green, Physical Connection (LINK) 1 Green, Exchange Data/Traffic Present (ACTIVE) 1 Green/Red, Expansion I/O Module Statsus (IOS) 1 Green, System Power Status 1 Green, Field Power Status 2 LEDs (each RJ45 Connector) 1 Yellow, Link/Active 1 Green, Not used For detailed indicators description, please follow the "LED indicators" section bellow.
System Power	Supply voltage : 24VDC nominal Supply voltage range : 15~32Vdc Protection : • Output current limit (Min. 1.5A) • Reverse polarity protection
Power Dissipation	70mA typical @ 24VDC
Current for I/O Module	1.5A @ 5VDC
Isolation	System power to internal logic : Non-isolation System power I/O driver : Isolation
Field Power	Supply voltage : 24VDC typical (Max. 32VDC) Field Power Range is different depending on URI module series. Refer to URI module`s specification.
Max. Current Field Power Contact	DC 10A Max
Weight	162g
Module Size	54mm x 99mm x 70mm

Wiring Diagram

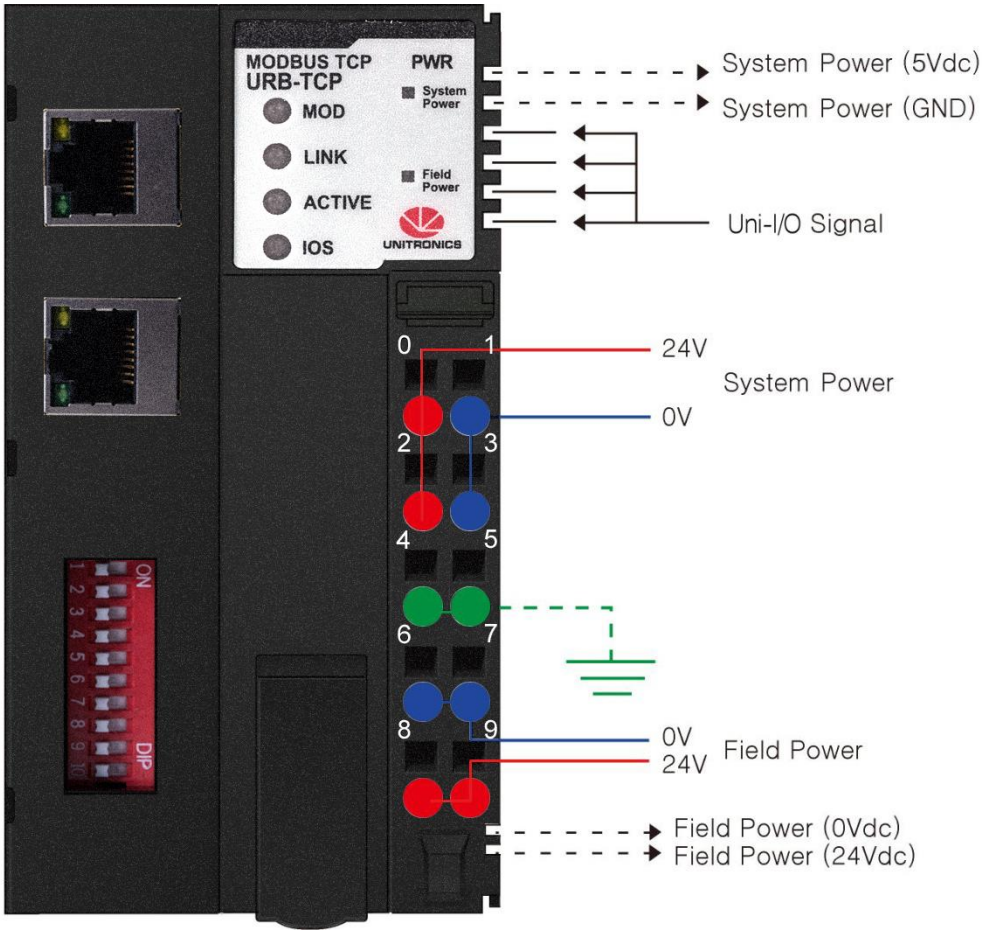

Pin No.	Signal Description	Pin No.	Signal Description
0	System Power, 24V	1	System Power, Ground
2	System Power, 24V	3	System Power, Ground
4	F.G	5	F.G
6	Field Power, Ground	7	Field Power, Ground
8	Field Power, 24V	9	Field Power, 24V

RJ45 Socket

RJ-45	Signal Name	Description
1	TD+	Transmit +
2	TD-	Transmit -
3	RD+	Receive +
4	-	
5	-	
6	RD-	Receive -
7	-	
8	-	
Case	Shield	

IP Address Setup using BOOTP Server

The URB adapter IP defaults are:

Default IP: 192.168.100.100

Subnet mask: 255.255.255.0

Note that on the adapter, there is a sticker showing its MAC address.

Editing the IP defaults

There are two methods of changing the IP address:

- Via UniLogic's BOOTP Server
  This is a utility accessible via the UniLogic ribbon
- Via DIP switch
  These are physical switches on the adapter

Selecting the IP Configuration Method

To enable the selected method, you must raise the appropriate DIP switch on the adapter. By factory default, the adapter is supplied with all switches down.

- Raise #9 to set IP via BOOTP Server:
  - Enables the adapter BOOTP/DHCP.
  - After power up, the adapter will send up to 20 consecutive BOOTP/DHCP request messages, one for every 2 seconds.
  - In case that the BOOTP/DHCP server does not respond, the Adapter applies the latest saved IP address.
- Raise #10 to set IP via DIP switch:
  You can then set the IP according to the description in the next table.

URB Adapter DIP Switches

<table>
<tr><th>#</th><th>Role</th><th>Description</th></tr>
<tr><td>1</td><td>IP bit#0</td><td rowspan="8">Lowest IP Address octet when
Switch #10=ON (raised)
Example: XXX.XXX.XXX.IP
[XXX.XXX.XXX represents the last configured network address]
Example for full bitmap: XXX.XXX.XXX.100
<table>
<tr><th>Bit0</th><th>Bit1</th><th>Bit2</th><th>Bit3</th><th>Bit4</th><th>Bit5</th><th>Bit6</th><th>Bit7</th><th>DHCP</th><th>USE IP</th></tr>
<tr><td>OFF</td><td>OFF</td><td>ON</td><td>OFF</td><td>OFF</td><td>ON</td><td>ON</td><td>OFF</td><td>OFF</td><td>ON</td></tr>
</table></td></tr>
<tr><td>2</td><td>IP bit#1</td></tr>
<tr><td>3</td><td>IP bit#2</td></tr>
<tr><td>4</td><td>IP bit#3</td></tr>
<tr><td>5</td><td>IP bit#4</td></tr>
<tr><td>6</td><td>IP bit#5</td></tr>
<tr><td>7</td><td>IP bit#6</td></tr>
<tr><td>8</td><td>IP bit#7</td></tr>
<tr><td>9</td><td>DHCP / BOOTP</td><td>Enable DHCP / BOOTP</td></tr>
<tr><td>10</td><td>Use DIP IP Value</td><td>Enable IP Address set by DIP Switches</td></tr>
</table>

Configuring IP using Unitronics BOOTP Server

Before you can set the IP address of the Remote IO adaptor via Unitronics BOOTP Server, you must raise DIP #9 (check that #10 is down)

1. Power OFF the URB adapter.
2. Raise DIP switch #9 to enable DHCP / BOOTP.
3. In UniLogic, in the Solution Explorer, select the adapter; the ribbon will open the tab URB Remote I/O.
4. On the ribbon, click on Run BOOTP Server to open the utility.

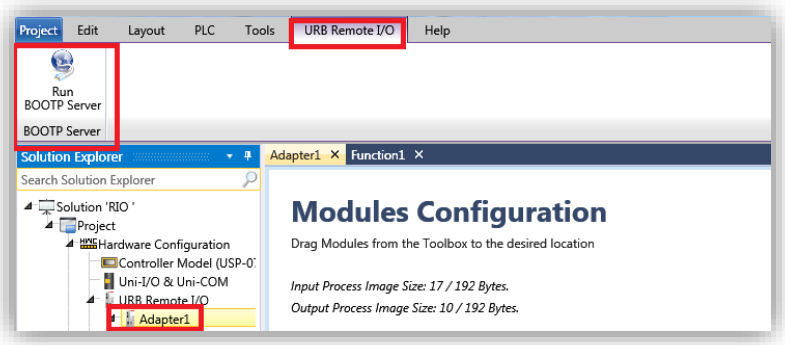

5. Click Start BootP in the **Unitronics** BOOTP Server; the upper section displays Ethernet devices that are in the network.

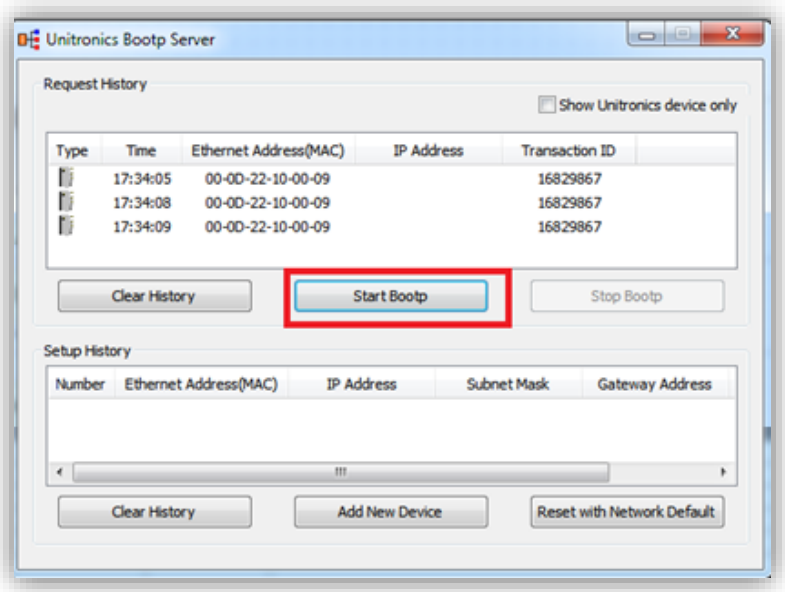

6. Power ON the URB adapter.
7. Locate the adapter's MAC address and double-click on the row.
8. Enter the required IP address and select your PC Network card.

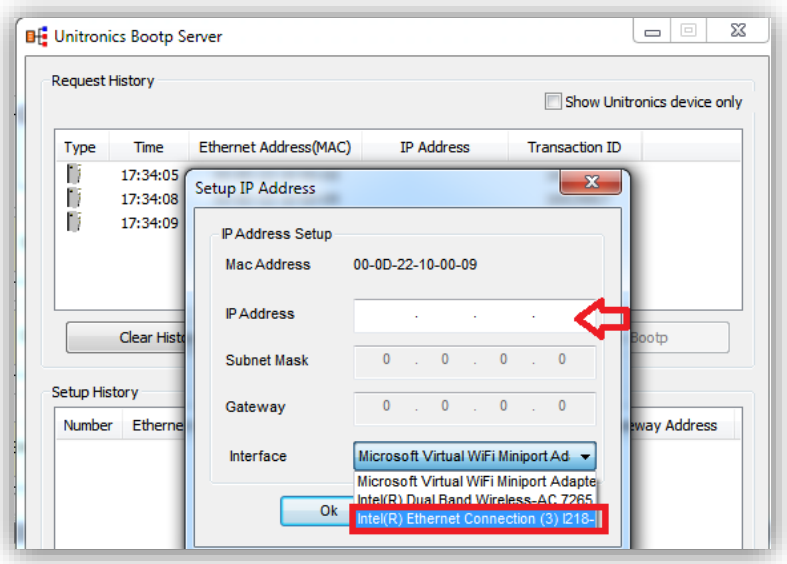

9. Click Ok. Now you should see the device in the bottom window including the IP address.

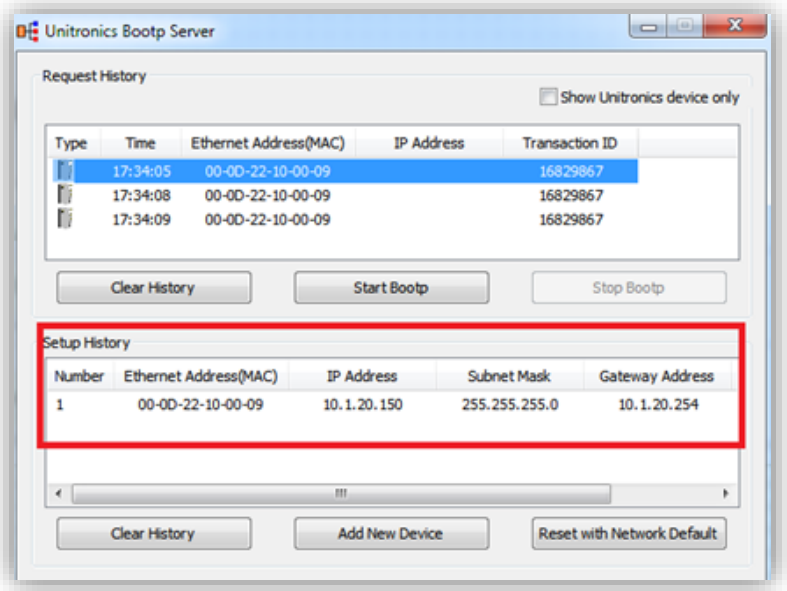

10. Power cycle the adapter; turn it off and on.
11. Use Ping from command line to check that the IP address is replying.

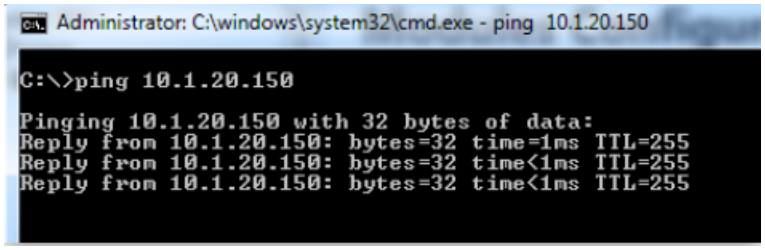

12. If the adapter replies successfully, then power off the adapter (URB-TCP) and lower DIP switch #9 (set to OFF).
13. Configure the adapter and IO modules in UniLogic and test.

LED Indicators

LED No.	LED Function / Description	LED Color
MOD	Module Status	Green/Red
LINK	Physical Connection	Green
ACTIVE	Exchange Data/Traffic Present	Green
IOS	Extension Module Status	Green/Red
System Power	System Power Enable	Green
Field Power	Field Power Enable	Green

MOD (Module Status LED)

Status	LED	Indication
Not Powered	OFF	Not power is supplied to the unit.
Device Operational	Green	The unit is operating in normal condition.
Devicce in Standby	Flashing Green	The device needs commissioning due to configuration missing, incomplete or incorrect.
Protocol Error	Green/Red Toggle	Protocol error such as watchodg error, etc.
Minor Fault	Flashing Red	Recoverable Fault. - EEPROM checksum fault.
Unrecoverable Fault	Red	The device has an unrecoverable fault. - Memory error or CPU watchdog error.

LINK (Physical Connection LED)

Status	LED	Indication
Not Powered or Not Linked	OFF	Device may not be powered
Adapter physical connected	Green	Adapter Ethernet Controller physically connected

ACTIVE (Exchange Data/Traffic Present LED)

Status	LED	Indication
Not Powered	OFF	Device is idle or may not be powered.
Adapter exchange data	Flashing Green	Adapter(slave) exchange data/Traffic present. About 10msec flashing.

IOS LED (Extension Module Status LED)

Status	LED	Indication
Not Powered	OFF	Device may not be powered.
No Expansion Module	Flashing Red	Adapter has no expansion module
Internal Bus Connection, Run Exchanging I/O	Green	Exchanging I/O data.
Expansion Configuration Failed	Red	One or more expansion module occurred in fault state. - Detected invalid expansion module ID. - Overflowed Input/Output Size - Too many expansion module - Initialization failure - Communication failure. - Changed expansion module configuration. - Mismatch vendor code between adapter and expansion module.

Field Power, System Power LED (Field Power, System Power Status LED)

Status	LED	Indication
No field, System power	OFF	Not supplied 24VDC field power, 5VDC system power.
Supplied field, System power	Green	Supplied 24VDC field power, 5VDC system power.

URB-TCP2 (URBTC2) – UniStream Remote IO Ethernet Adapter, 6 modules

Specifications

Items	Specification
Adapter Type	Slave node (MODBUS/TCP,MODBUS/UDP Server)
Protocol	MODBUS/TCP,MODBUS/UDP,HTTP,DHCP,10 TCP Connections
Sub-Protocol	*Ethernet/IP
Max. Expantsion Module	6 slots
Max. Input / Output Data Size	Max. Input 256 bytes / Output 256 bytes
Max Length Bus Line	Up to 100m from Ethernet Hub/Switch with twisted CAT5 UTP/STP
Max. Nodes	Limited by Ethernet Specification.
Baud Rate	10/100Mbps, Auto-negotiation, Full duplex
Interface Connector	RJ-45 socket * 2pcs
IP-Address Setup	Via DHCP/BOOTP or IOGuide(Crevis Software)
IP-Address Range	xxx.xxx.xxx.1 ~ 253 (User area) xxx.xxx.xxx.254 ~ 255 (Reserved for IAP Function)
IAP Mode	When DIP Switch 1 to 8 setting is 254 or 255 (Using only Internet Explorer / recommended version 11)
Indicator	4 LEDs 1 Green/Red, Module Status (MOD) 1 Green, Physical Connection (LINK) 1 Green, Exchange Data/Traffic Present (ACTIVE) 1 Green/Red, Expansion I/O Module Statsus (IOS) 2 LEDs (each RJ45 Connector) 1 Yellow, Link/Active 1 Green, Not used
Module Location	Starter module left side of URB system
System Power	Supply voltage : 24Vdc nominal Supply voltage range : 15~28.8Vdc Reverse polarity protection
Power Dissipation	75mA typical @ 24Vdc
Current for I/O Module	1.0A @ 5Vdc
Isolation	System power to internal logic : Non-isolation System power I/O driver : Isolation
Field Power	Supply voltage : 24Vdc typical (Max. 32Vdc) * Field Power Range is different depending on IO Module series. Refer to IO Module`s Specification.
Max. Current Field Power Contact	DC 8A Max
Weight	76g
Module size	22mm x 109mm x 70mm

Wiring Diagram

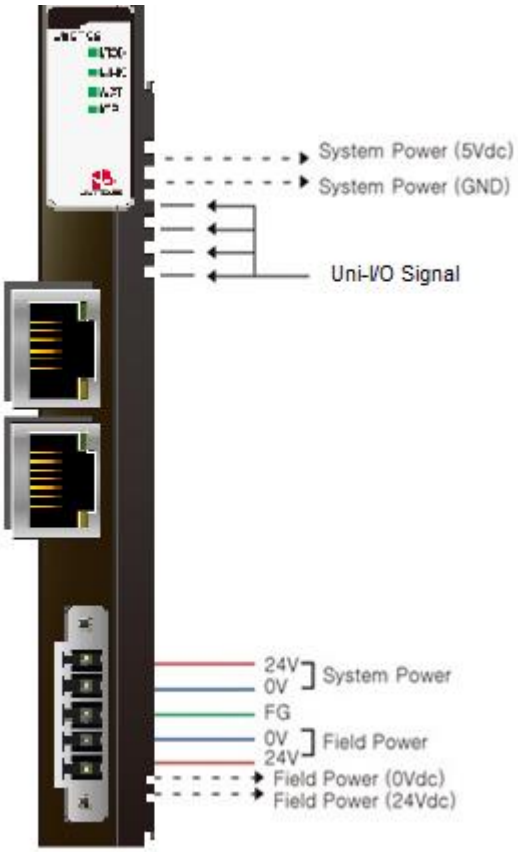

Pin No.	Signal Description
1	System Power, 24V
2	System Power, Ground
3	F.G
4	Field Power, Ground
5	Field Power, 24V

RJ45 Socket

RJ-45	Signal Name	Description
1	TD+	Transmit +
2	TD-	Transmit -
3	RD+	Receive +
4	-	
5	-	
6	RD-	Receive -
7	-	
8	-	
Case	Shield	

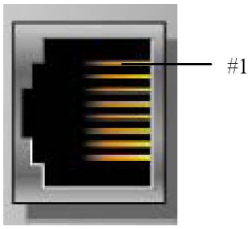

IP Address Setup using BOOTP Server

The URB adapter IP defaults are:

Default IP: 192.168.100.100

Subnet mask: 255.255.255.0

Note that on the adapter, there is a sticker showing its MAC address.

Editing the IP defaults

There are two methods of changing the IP address:

- Via UniLogic's BOOTP Server
  This is a utility accessible via the UniLogic ribbon
- Via DIP switch
  These are physical switches on the adapter

Selecting the IP Configuration Method

To enable the selected method, you must raise the appropriate DIP switch on the adapter. By factory default, the adapter is supplied with all switches down.

- Raise #9 to set IP via BOOTP Server:
  - Enables the adapter BOOTP/DHCP.
  - After power up, the adapter will send up to 20 consecutive BOOTP/DHCP request messages, one for every 2 seconds.
  - In case that the BOOTP/DHCP server does not respond, the Adapter applies the latest saved IP address.
- Raise #10 to set IP via DIP switch:
  You can then set the IP according to the description in the next table.

URB Adapter DIP Switches

<table>
<tr><th>#</th><th>Role</th><th>Description</th><th rowspan="11">DIP # 9: Enable IP via BOOTP
DIP # 10: Enable IP via DIP switches
 </th></tr>
<tr><td>1</td><td>IP bit#0</td><td rowspan="8">Lowest IP Address octet when
Switch #10=ON (raised)
Example: XXX.XXX.XXX.IP
[XXX.XXX.XXX represents the last configured network address]
Example for full bitmap: XXX.XXX.XXX.100
<table><tr><td>Bit0</td><td>Bit1</td><td>Bit2</td><td>Bit3</td><td>Bit4</td><td>Bit5</td><td>Bit6</td><td>Bit7</td><td>DHCP</td><td>USE IP</td></tr><tr><td>OFF</td><td>OFF</td><td>ON</td><td>OFF</td><td>OFF</td><td>ON</td><td>ON</td><td>OFF</td><td>OFF</td><td>ON</td></tr></table></td></tr>
<tr><td>2</td><td>IP bit#1</td></tr>
<tr><td>3</td><td>IP bit#2</td></tr>
<tr><td>4</td><td>IP bit#3</td></tr>
<tr><td>5</td><td>IP bit#4</td></tr>
<tr><td>6</td><td>IP bit#5</td></tr>
<tr><td>7</td><td>IP bit#6</td></tr>
<tr><td>8</td><td>IP bit#7</td></tr>
<tr><td>9</td><td>DHCP / BOOTP</td><td>Enable DHCP / BOOTP</td></tr>
<tr><td>10</td><td>Use DIP IP Value</td><td>Enable IP Address set by DIP Switches</td></tr>
</table>

Configuring IP using Unitronics BOOTP Server

Before you can set the IP address of the Remote IO adaptor via Unitronics BOOTP Server, you must raise DIP #9 (check that #10 is down)

14. Power OFF the URB adapter.
15. Raise DIP switch #9 to enable DHCP / BOOTP.
16. In UniLogic, in the Solution Explorer, select the adapter; the ribbon will open the tab URB Remote I/O.
17. On the ribbon, click on Run BOOTP Server to open the utility.

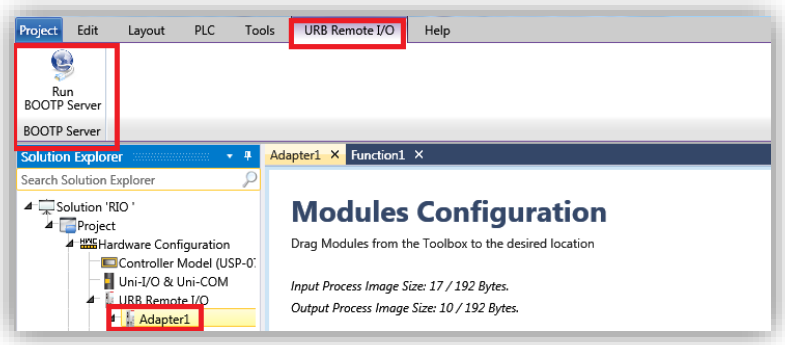

18. Click Start BootP in the **Unitronics** BOOTP Server; the upper section displays Ethernet devices that are in the network.

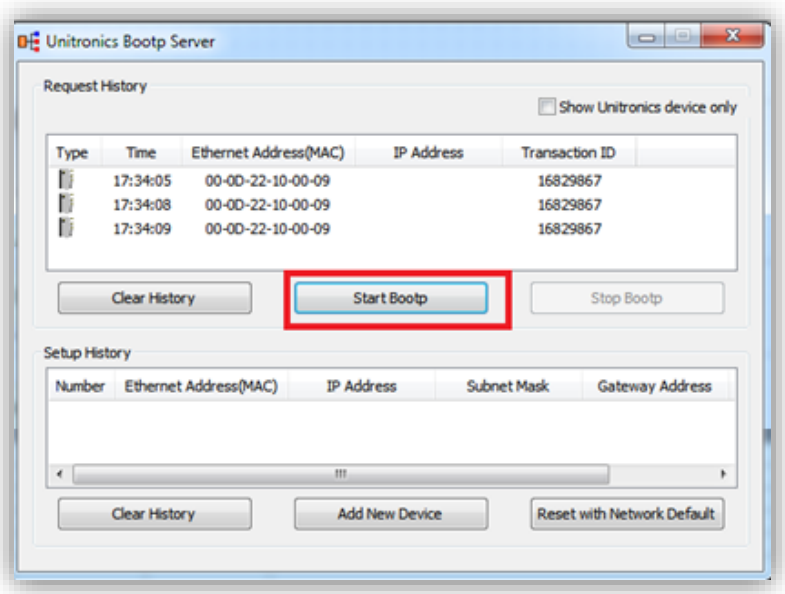

19. Power ON the URB adapter.
20. Locate the adapter's MAC address and double-click on the row.
21. Enter the required IP address and select your PC Network card.

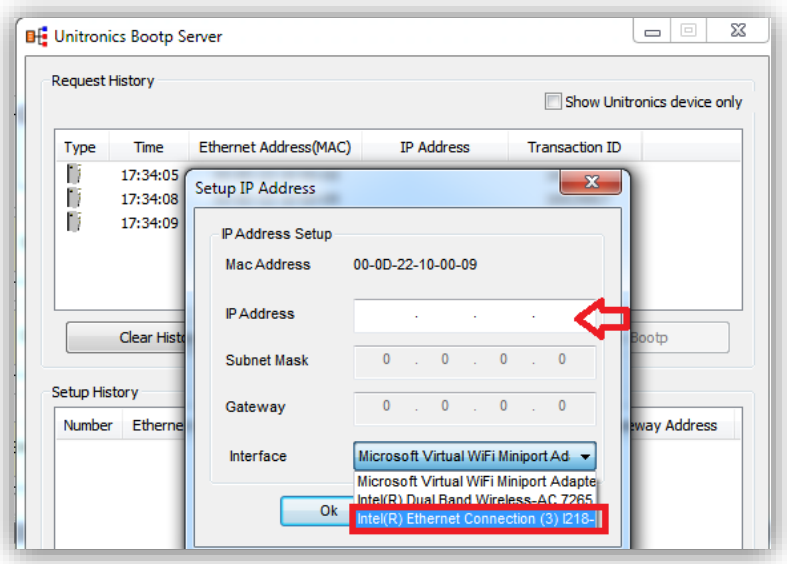

22. Click Ok. Now you should see the device in the bottom window including the IP address.

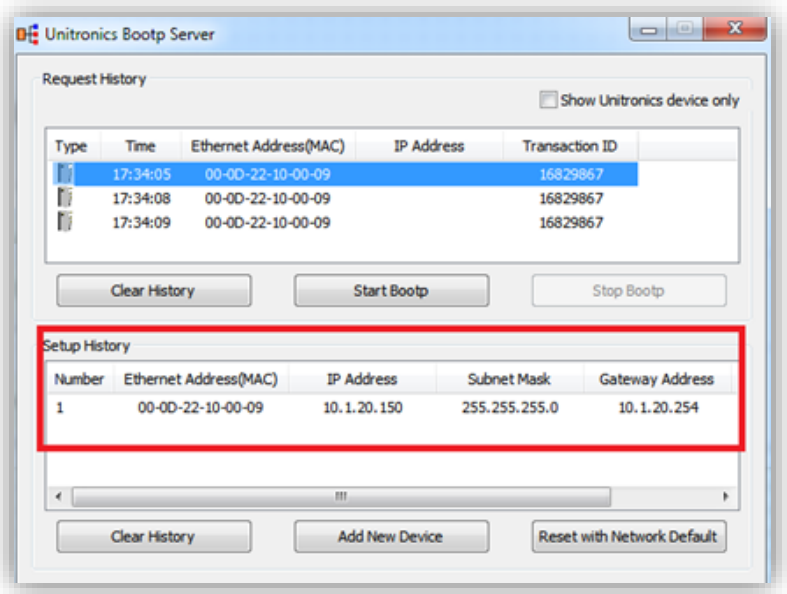

23. Power cycle the adapter; turn it off and on.
24. Use Ping from command line to check that the IP address is replying.

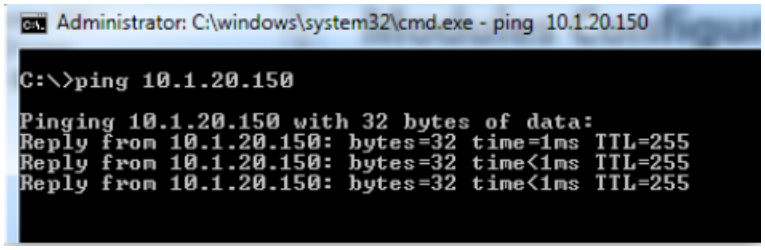

25. If the adapter replies successfully, then power off the adapter (URB-TCP) and lower DIP switch #9 (set to OFF).
26. Configure the adapter and IO modules in UniLogic and test.

LED Indicators

LED No.	LED Function / Description	LED Color
MOD	Module Status	Green/Red
LINK	Physical Connection	Green
ACTIVE	Exchange Data/Traffic Present	Green
IOS	Extension Module Status	Green/Red

MOD (Module Status LED)

Status	LED	Indication
Not Powered	OFF	Not power is supplied to the unit.
Device Operational	Green	The unit is operating in normal condition.
Devicce in Standby	Flashing Green	The device needs commissioning due to configuration missing, incomplete or incorrect.
Protocol Error	Green/Red Toggle	Protocol error such as watchodg error, etc.
Minor Fault	Flashing Red	Recoverable Fault. - EEPROM checksum fault.
Unrecoverable Fault	Red	The device has an unrecoverable fault. - Memory error or CPU watchdog error.

LINK (Physical Connection LED)

Status	LED	Indication
Not Powered or Not Linked	OFF	Device may not be powered
Adapter physical connected	Green	Adapter Ethernet Controller physically connected

ACTIVE (Exchange Data/Traffic Present LED)

Status	LED	Indication
Not Powered	OFF	Device is idle or may not be powered.
Adapter exchange data	Flashing Green	Adapter(slave) exchange data/Traffic present. About 10msec flashing.

IOS LED (Extension Module Status LED)

Status	LED	Indication
Not Powered	OFF	Device may not be powered.
No Expansion Module	Flashing Red	Adapter has no expansion module
Internal Bus Connection, Run Exchanging I/O	Green	Exchanging I/O data.
Expansion Configuration Failed	Red	One or more expansion module occurred in fault state. - Detected invalid expansion module ID. - Overflowed Input/Output Size - Too many expansion module - Initialization failure - Communication failure. - Changed expansion module configuration. - Mismatch vendor code between adapter and expansion module.

URD-0800 (DI08) - 8 Digital Inputs (sink or source)

Items	Specification
Inputs per module	8 Points Universal type
Indicators	8 Green Input state
ON–state Voltage	24VDC nominal Min. 15VDC to Max. 32VDC
OFF-state voltage	8.3VDC @ 25 ºC (77°F)
ON-state current	3.03mA maximum/input @32VDC
Input Signal Delay	OFF to ON : 0.3ms Max ON to OFF : 0.3ms Max
Input filter	Adjustable, up to 10ms
Nominal Input Impedance	10.2K ohm typical
COMMON Type	8 points / External 2COM (Universal)
Power dissipation	35mA maximum @ 5.0VDC
Isolation	I/O to Logic : Optocoupler Isolation
Field Power	Supply voltage : 24VDC nominal Voltage range : 15 to 32VDC Power dissipation : 0mA @ 24VDC
Wiring	I/O Cable Max. $2.0mm^2$ (AWG 14)
Weight	39g
Module Size	12mm x 99mm x 70mm
Operating temperature	-40°C to 70°C (-40°F to 158°F)

1. Wiring Diagram

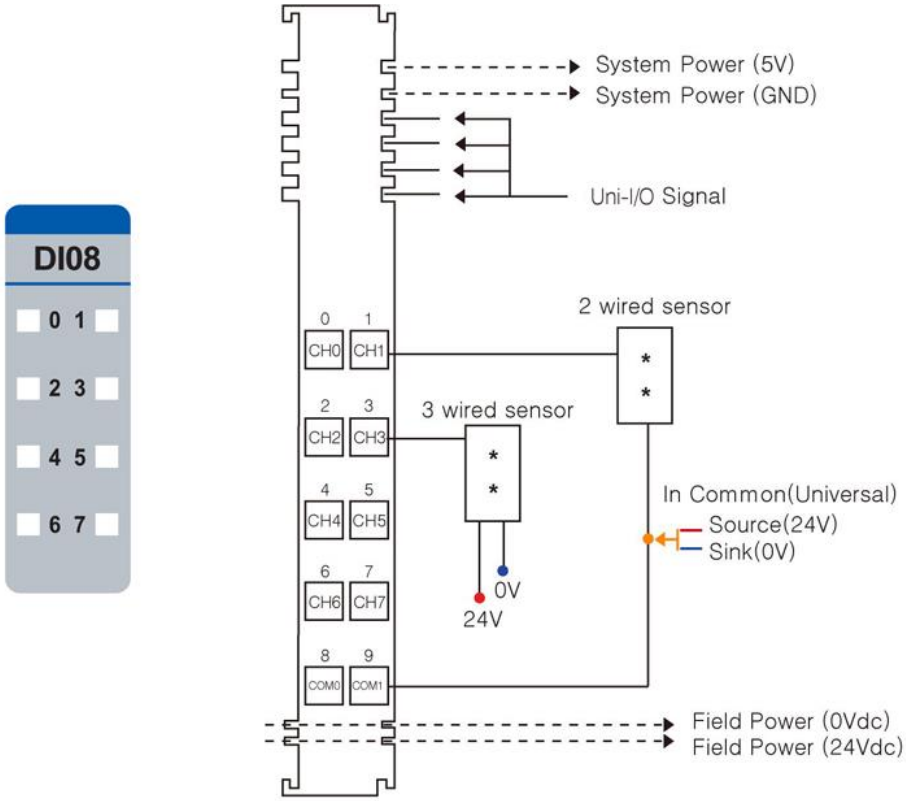

Pin No.	Signal Description	Pin No.	Signal Description
0	Input 0	1	Input 1
2	Input 2	3	Input 3
4	Input 4	5	Input 5
6	Input 6	7	Input 7
8	Common(Sink Oper.0V / Source Oper.24V)	9	Common(Sink Oper.0V / Source Oper.24V)

2. LED Indicators

LED No.	LED Function / Description	LED Color
0	Input 0	Green
1	Input 1	Green
2	Input 2	Green
3	Input 3	Green
4	Input 4	Green
5	Input 5	Green
6	Input 6	Green
7	Input 7	Green

Status	LED	Indication
No Signal	Off	Normal Operation
On Signal	Green	Normal Operation

URD-1600-8 (DI168) - 16 Digital Inputs (Sink / Source)

Items	Specification
Inputs per module	16 Points Universal Digital Type
Indicators	16 Green input state
ON–state Voltage	24VDC nominal 70°C (158°F) - Min. 15 VDC to Max. 28.8 VDC 60°C (140°F) - Min. 15 VDC to Max. 32 VDC
ON-state current	3.05mA maximum/input @32VDC
Input Signal Delay	OFF to ON : 0.3ms Max ON to OFF : 0.3ms Max
Nominal Input Impedance	14.9K ohm typical
COMMON Type	16 points / 2 COM
Power dissipation	50mA maximum @ 5.0VDC
Isolation	I/O to Logic : Photocoupler Isolation
Field Power	Supply voltage : 24VDC nominal Voltage range : 15 to 32VDC Power dissipation : 0mA @ 32VDC
Wiring	I/O Cable Max. $0.75mm^2$(AWG 18)
Weight	63g
Module Size	12mm x 109mm x 70mm
Operating temperature	-40°C to 70°C (-40°F to 158°F)

1. Wiring Diagram

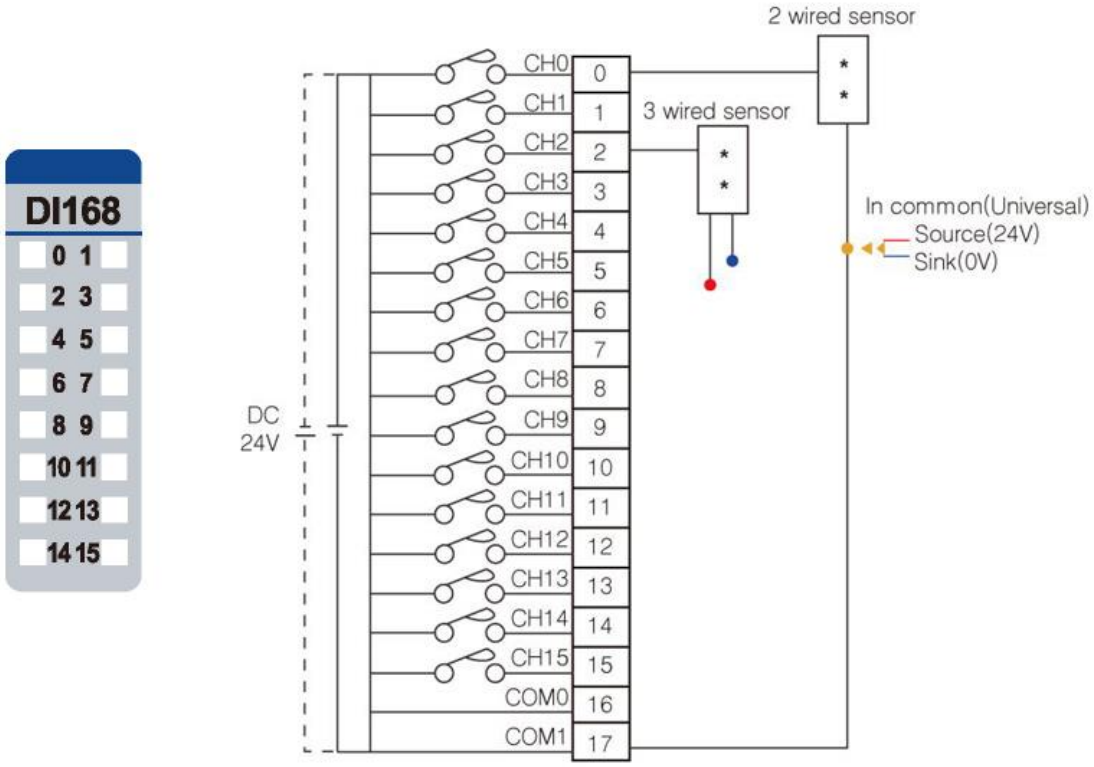

Pin No.	Signal Description	Pin No.	Signal Description
0	Input 0	1	Input 1
2	Input 2	3	Input 3
4	Input 4	5	Input 5
6	Input 6	7	Input 7
8	Input 8	9	Input 9
10	Input 10	11	Input 11
12	Input 12	13	Input 13
14	Input 14	15	Input 15
16	Common(Sink Oper.0V / Source Oper.24V)	17	Common(Sink Oper.0V / Source Oper.24V)

2. LED Indicators

LED No.	LED Function / Description	LED Color
0	Input 0	Green
1	Input 1	Green
2	Input 2	Green
3	Input 3	Green
4	Input 4	Green
5	Input 5	Green
6	Input 6	Green
7	Input 7	Green
8	Input 8	Green
9	Input 9	Green
10	Input 10	Green
11	Input 11	Green
12	Input 12	Green
13	Input 13	Green
14	Input 14	Green
15	Input 15	Green

Status	LED	Indication
Not Signal	Off	Normal Operation
On Signal	Green	Normal Operation

URD-3200-4 (DI324) - 32 Digital Inputs (Sink / Source)

Items	Specification
Inputs per module	32 Points Universal Digital Type
Indicators	32 Green Input Status LEDs
ON–state Voltage	24VDC nominal Min. 15VDC ~ Max. 32VDC
ON-state current	3mA maximum/input @32VDC
Input Signal Delay	OFF to ON : 0.2ms Max ON to OFF : 0.2ms Max
Nominal Input Impedance	10.2K ohm typical
COMMON Type	32 Point / External 8COM(Universal)
Power dissipation	55mA maximum @ 5.0VDC
Isolation	I/O to Logic : Photocoupler Isolation
Field Power	Supply voltage : 24VDC nominal Voltage range : 15 to 32VDC Power dissipation : 0mA @ 24VDC
Wiring	Module connector : HIF3BA-40D-2.54R
Weight	59g
Module Size	12mm x 109mm x 70mm
Operating temperature	-40°C to 70°C (-40°F to 158°F)

1. Wiring Diagram

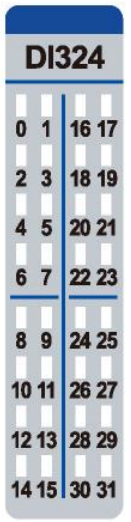

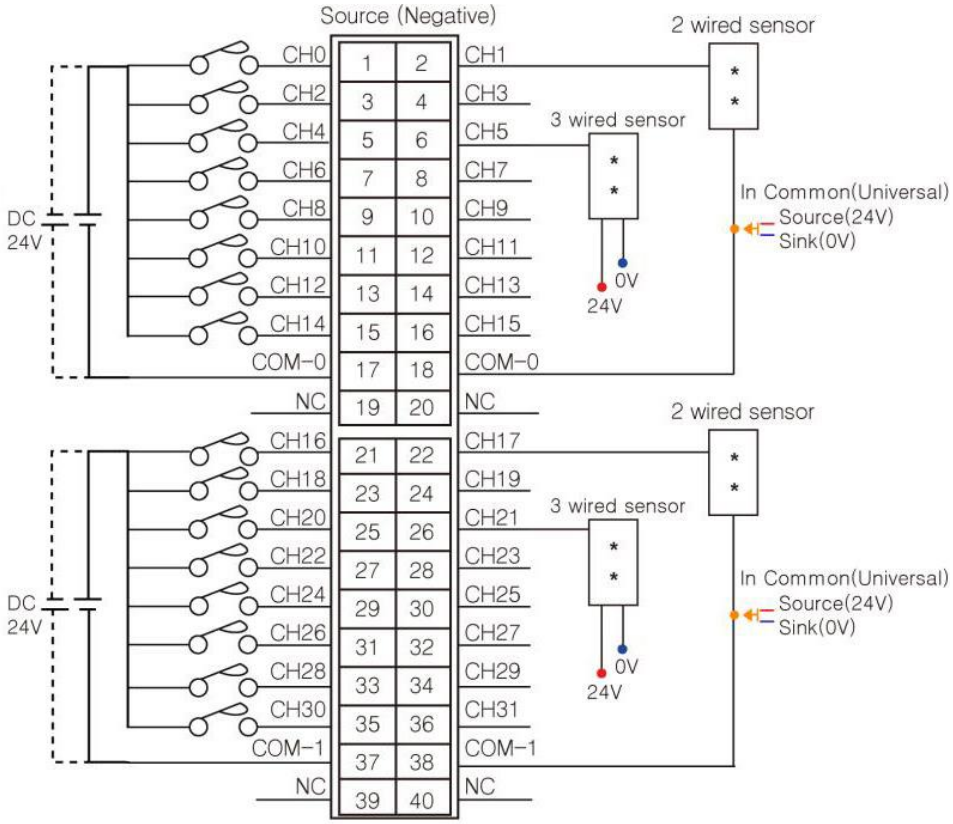

in No.	Signal Description	Pin No.	Signal Description
1	Input 0	2	Input 1
3	Input 2	4	Input 3
5	Input 4	6	Input 5
7	Input 6	8	Input 7
9	Input 8	10	Input 9
11	Input 10	12	Input 11
13	Input 12	14	Input 13
15	Input 14	16	Input 15
17	Common(Sink Oper.0V / Source Oper.24V)	18	Common(Sink Oper.0V Source Oper.24V)
19	NC	20	NC
21	Input 16	22	Input 17
23	Input 18	24	Input 19
25	Input 20	26	Input 21
27	Input 22	28	Input 23
29	Input 24	30	Input 25
31	Input 26	32	Input 27
33	Input 28	34	Input 29
35	Input 30	36	Input 31
37	Common(Sink Oper.0V / Source Oper.24V)	38	Common(Sink Oper.0V / Source Oper.24V)
39	NC	40	NC

2. LED Indicators

LED No.	LED Function / Description	LED Color
0	INPUT 0	Green
1	INPUT 1	Green
2	INPUT 2	Green
...	...	Green
31	INPUT 31	Green

Status	LED	Indication
No Signal	Off	Normal Operation
On Signal	Green	Normal Operation

URD-0400B (DI04B) - 4 Digital Inputs

Items	Specification
Inputs per module	4 Points type
Indicators	4 Green input state
ON–state Voltage	120VAC nominal Min. 85VAC to Max. 132VAC
ON-state current	7.5mA maximum/point @120Vac
Input Signal Delay	OFF to ON : 30ms @ 120VAC ON to OFF : 130ms @ 120VAC
Nominal Input Impedance	17.5K ohm typical
COMMON Type	4 Points / 4 Common (L2/N)
Power dissipation	30mA maximum @ 5.0VDC
Isolation	I/O to Logic : Photocoupler isolation
Field Power	Supply voltage : 24VDC nominal Voltage range : 15 to 32VDC (AC Power Not used)
Wiring	I/O Cable Max. 2.0mm^2 (AWG 14)
Weight	57g
Module Size	12mm x 99mm x 70mm
Operating temperature	-40°C to 70°C (-40°F to 158°F)

1. Wiring Diagram

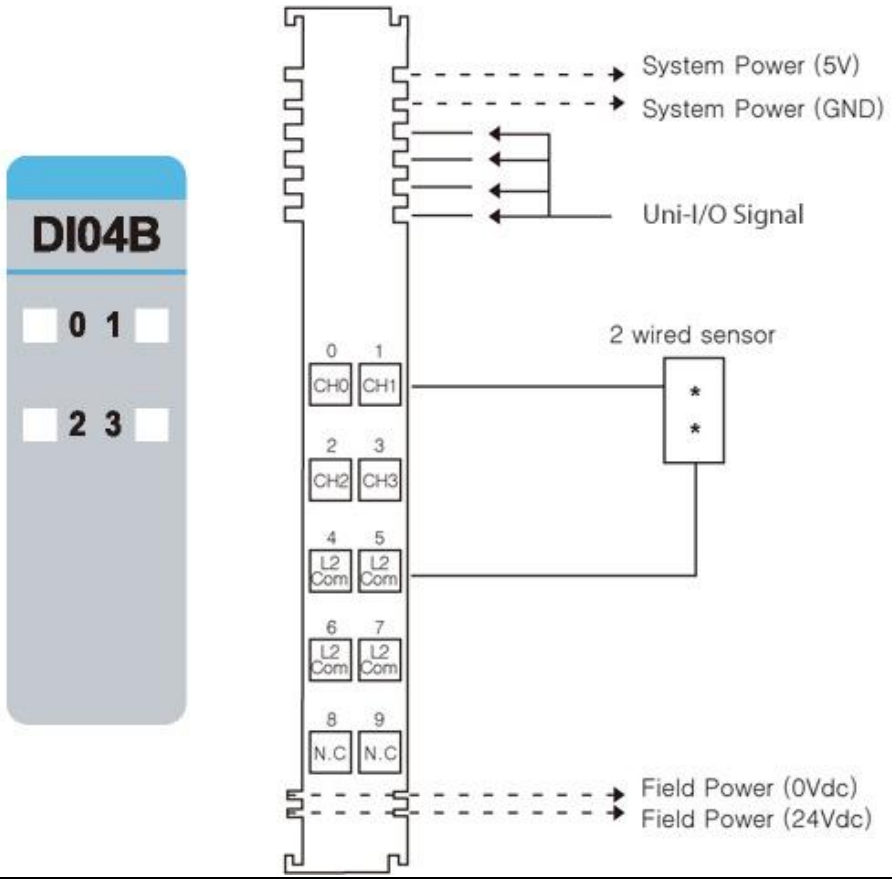

Pin No.	Signal Description	Pin No.	Signal Description
0	Input 0	1	Input 1
2	Input 2	3	Input 3
4	Input Common (L2/N)	5	Input Common (L2/N)
6	Input Common (L2/N)	7	Input Common (L2/N)
8	N.C	9	N.C

2. LED Indicators

LED No.	LED Function / Description	LED Color
0	Input 0	Green
1	Input 1	Green
2	Input 2	Green
3	Input 3	Green

Status	LED	Indication
No Signal	Off	No Input Signal
On Signal	Green	Normal Operation

URD-0400C (DI04C) - 4 Digital Inputs

Items	Specification
Inputs per module	4 Points Sink type
Indicators	4 Green input state
ON–state Voltage	240VAC nominal Min. 170VAC to Max. 264VAC
ON-state current	7.5mA maximum/point @120VAC
Input Signal Delay	OFF to ON : 30ms @ 240VAC ON to OFF : 140ms @ 240VAC
Nominal Input Impedance	26.5K ohm typical
COMMON Type	4 Points / 4 Common (L2/N)
Power dissipation	30mA maximum @ 5.0VDC
Isolation	I/O to Logic : Photocoupler isolation
Field Power	Supply voltage : 24VDC Voltage range : 15 to 32VDC (AC Power Not used)
Wiring	I/O Cable Max. 2.0mm^2 (AWG 14)
Weight	57g
Module Size	12mm x 99mm x 70mm
Operating temperature	-40°C to 60°C (-40°F to 140°F)

1. Wiring Diagram

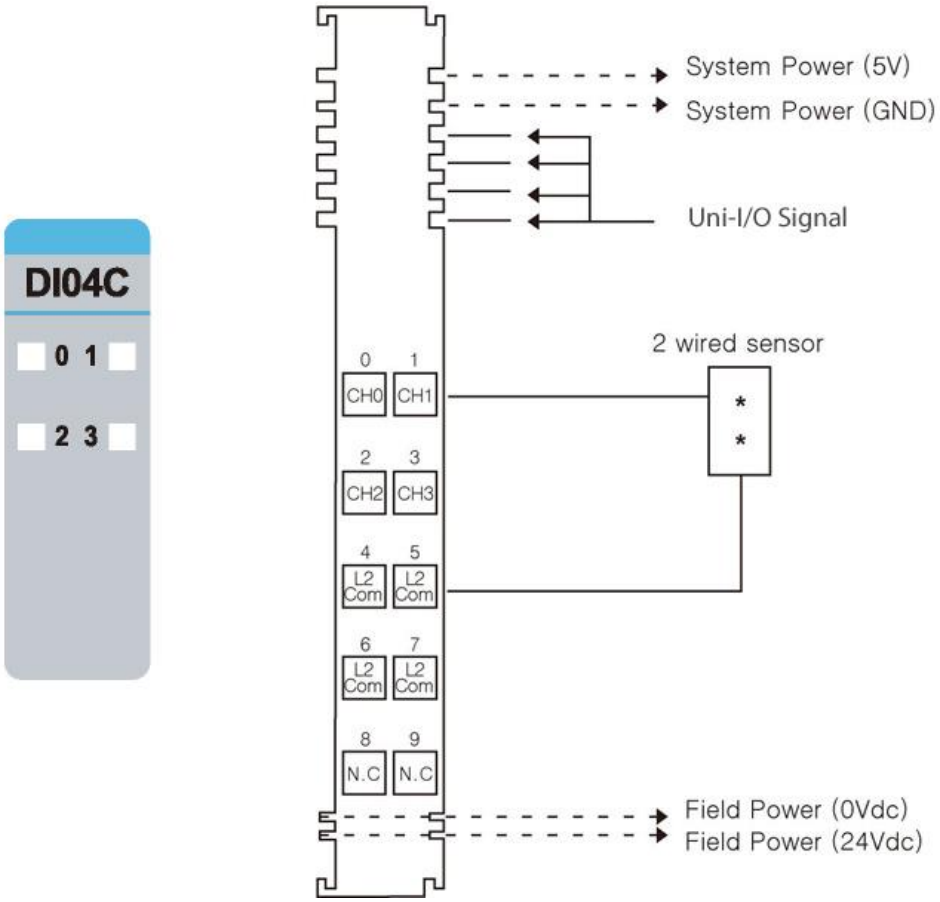

Pin No.	Signal Description	Pin No.	Signal Description
0	Input 0	1	Input 1
2	Input 2	3	Input 3
4	Input Common (L2/N)	5	Input Common (L2/N)
6	Input Common (L2/N)	7	Input Common (L2/N)
8	N.C	9	N.C

2. LED Indicators

LED No.	LED Function / Description	LED Color
0	Input 0	Green
1	Input 1	Green
2	Input 2	Green
3	Input 3	Green

Status	LED	Indication
No Signal	Off	No Input Signal
On Signal	Green	Normal Operation

URD-0200E (DI02E) - 2 High Speed Counters / Encoder Inputs

Items	Specification
Number of Channel	2 Channels - Encoder, High Speed Counter, Frequency measurement Pulse width & Period measurement
Indicators	4 Green Terminal Input LEDs
Input Voltage	24VDC nominal (Max 28.8Vdc)
Input Current	3.0mA @ 24VDC
Min On-State Volt/Current	≥16.5VDC (25°C) / 2.0mA
Input Frequency	0~600KHz Encoder Mode 0~600kHz Counting Mode
Counting Mode	1-Input Mode : Up,Down 2-Input Mode : Encoder 4x, Encoder 2x, Up/Inhibit, Up/Reset, Down/Inhibit, Down/Reset, UP/Down, Clock/Direction, Frequency Measurement, Pulse Width & Period measurement
Counter Size	32bit-wide/Channel
Power Dissipation	65mA maximum @ 5.0VDC
Isolation	I/O to Logic : Photocoupler isolation I/O to Field Power : Non-Isolation
Field Power (Bypass)	Not used Field power bypass to next expansion module
Wiring	I/O Cable Max. 2.0mm^2 (AWG 14)
Weight	60g
Module Size	12mm x 90.5mm x 65mm
Operating temperature	-20°C to 70°C (-4°F to 158°F)

1. Wiring Diagram

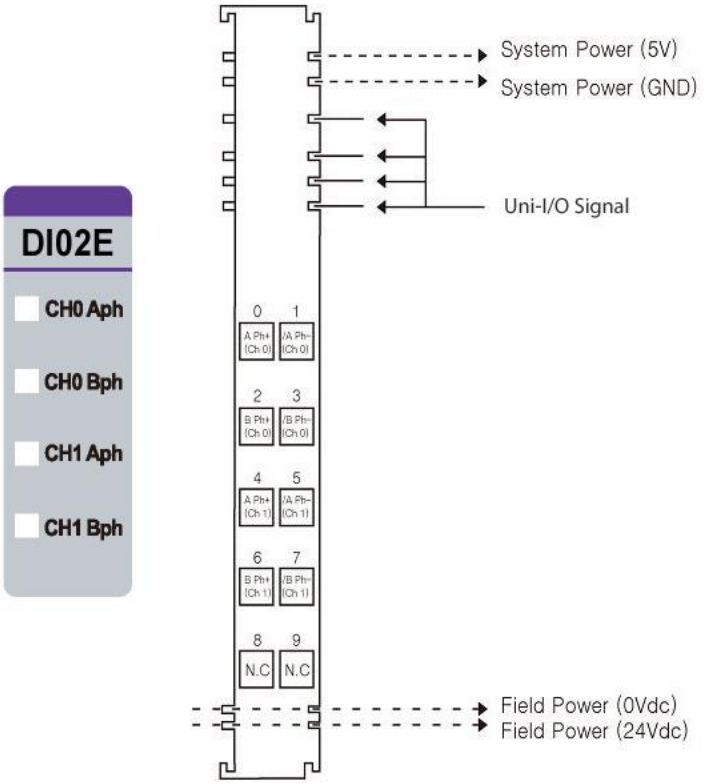

Pin No.	Signal Description	Pin No.	Signal Description
0	Aph Input+ Ch# 0	1	Aph Input - Ch# 0
2	Bph Input+ Ch# 0	3	Bph Input - Ch# 0
4	Aph Input+ Ch# 1	5	Aph Input - Ch# 1
6	Bph Input+ Ch# 1	7	Bph Input - Ch# 1
8	Shield	9	Shield

2. LED Indicators

LED No.	LED Function / Description	LED Color
0	Aph Input 0	Green
1	Bph Input 0	Green
2	Aph Input 1	Green
3	Bph Input 1	Green

Status	LED	Indication
No Signal	Off	Normal Operation
On Signal	Green	Normal Operation

Value	Count Mode	Description
B' 0000 (0x0)	Encoder 4x	Encoder 4x - Aph Input acts as Encoder's A phase Input - Bph Input acts as Encoder's B phase Input
B' 0001 (0x1)	Encoder 2x	Encoder 2x - Aph Input acts as Encoder's A phase Input - Bph Input acts as Encoder's B phase Input
B' 0010 (0x2)	Up	Up Counter - Aph Input acts as Up Clock - Bph Input is not used
B' 0011 (0x3)	Down	Down Counter - Aph Input acts as Down Clock - Bph Input is not used
B' 0100 (0x4)	Up Clock & Inhibit	Up Counter with Inhibit - Aph Input acts as Up Clock Input - Bph Input acts as Inhibit function for Up Clock Input
B' 0101 (0x5)	Up Clock & Reset	Up Counter with Reset - Aph Input acts as Up Clock Input - Bph Input acts as Reset function to Counter
B' 0110 (0x6)	Down Clock & Inhibit	Down Counter with Inhibit - Aph Input acts as Down Clock Input - Bph Input acts as Inhibit function for Down Clock Input
B' 0111 (0x7)	Down Clock & Reset	Down Counter with Reset - Aph Input acts as Down Clock Input - Bph Input acts as Reset function to Counter
B' 1000 (0x8)	Up Clock & Down Clock	Up & Down Counter

		- Aph Input acts as Up Clock Input - Bph Input acts as Down Clock Input
B’ 1001 (0x9)	Clock & Direction	Up & Down with Direction - Aph Input acts as Clock Input - Bph Input acts as Direction Input (Low = Up Count, High = Down Count)
B’ 1010 (0xA)	Encoder 4x (*1)	Encoder 4x - Aph Input acts as Encoder’s A phase Input - Bph Input acts as Encoder’s B phase Input
B’ 1011 (0xB)	Encoder 2x (*1)	Encoder 2x - Aph Input acts as Encoder’s A phase Input - Bph Input acts as Encoder’s B phase Input
B’ 1100 (0xC)	Frequency Measurement (*2) 1 sec Update	Simple Frequency Measurement, updated by 1sec, Hz Unit - Aph Input acts as Frequency Input - Bph Input is not used
B’ 1101 (0xD)	Frequency Measurement 100 msec (0.1sec) Update	Simple Frequency Measurement, updated by 100msec, Hz Unit - Available in case of Pulse Input >= 10Hz - Aph Input acts as Frequency Input - Bph Input is not used
B’ 1110 (0xE)	Pulse Width Measurement	Simple Pulse Width Measurement, 0.1usec Unit - Pulse Width(32bit), if 1234, then Pulse High(On) width is 123.4usec (*3) - Aph Input acts as Pulse Input - Bph Input is not used
B’ 1111 (0xF)	Pulse Width & Period Measurement	Simple Pulse Width & Period Measurement, 0.1usec Unit, - Available in case of Pulse Input >= 200Hz(<= 2.5msec, Pulse On Width) - Pulse Width(16bit, Low Word) + Pulse Period(16bit, High Word) (*4) - Aph Input acts as Pulse Input - Bph Input is not used

- This encoder mode is perfectly same with mode B’0000, B’0001. This is for using Encoder module easily.
- Frequency, B’1100(0xC) and B’1101(0xD) can’t be used with other channel’s Count Mode = 0x2 ~ 0x9
- Pulse Width, B’1110(0xE) measures Aph Input’s High(On) Pulse Width(32bit) in 0.1usec unit.
- Pulse Width & Period, B’1111(0xF) measures Aph’s Pulse High(On) Width(16bit) & Period(16bit) in 0.1usec unit.

URD-0200D (DI02D) - 2 High Speed Counters / Encoder Inputs

Items	Specification
Number of Channel	2 Channels - Encoder, High Speed Counter, Frequency measurement Pulse width & Period measurement
Indicators	4 Green Terminal Input LEDs
Input Voltage	5VDC(Max)
Input Current	13mA@5.2VDC
Min On-State Volt	≥2.1VDC
Max Off-State Volt	≤2.0VDC
Input Frequency	0~600KHz Encoder Mode 0~1MHz Counting Mode
Counting Mode	1-Input Mode : Up,Down 2-Input Mode : Encoder 4x, Up/Inhibit, Up/Reset, Down/Inhibit down/Reset, UP/Down, Clock/Direction, Frequency Measurement, Pulse Width & Period measurement
Counter Size	32bit-wide/Channel
Power Dissipation	70mA maximum @ 5.0VDC
Isolation	I/O to Logic : Photocoupler isolation I/O to Field Power : Non-Isolation
Field Power (Bypass)	Supply voltage : 24VDC nominal Voltage range : 18~32VDC
Wiring	I/O Cable Max. 2.0mm^2 (AWG 14)
Weight	60g
Module Size	12mm x 90.5mm x 65mm
Operating temperature	-40°C to 70°C (-40°F to 158°F)

1. Wiring Diagram

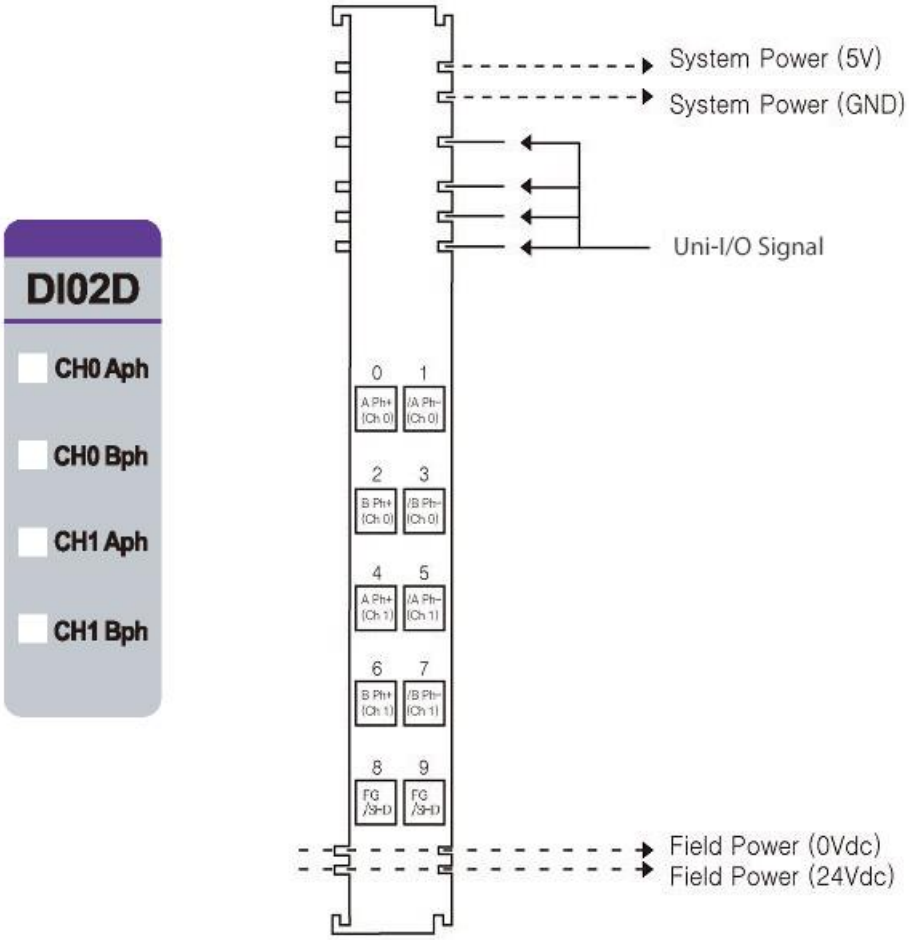

Pin No.	Signal Description	Pin No.	Signal Description
0	Aph Input+ Ch# 0	1	Aph Input - Ch# 0
2	Bph Input+ Ch# 0	3	Bph Input - Ch# 0
4	Aph Input+ Ch# 1	5	Aph Input - Ch# 1
6	Bph Input+ Ch# 1	7	Bph Input - Ch# 1
8	Shield	9	Shield

2. LED Indicators

LED No.	LED Function / Description	LED Color
0	Aph Input 0	Green
1	Bph Input 0	Green
2	Aph Input 1	Green
3	Bph Input 1	Green

Status	LED	Indication
No Signal	Off	Normal Operation
On Signal	Green	Normal Operation

Value	Count Mode	Description
B' 0000 (0x0)	Encoder 4x	Encoder 4x - Aph Input acts as Encoder's A phase Input - Bph Input acts as Encoder's B phase Input
B' 0001 (0x1)	Encoder 2x	Encoder 2x - Aph Input acts as Encoder's A phase Input - Bph Input acts as Encoder's B phase Input
B' 0010 (0x2)	Up	Up Counter - Aph Input acts as Up Clock - Bph Input is not used
B' 0011 (0x3)	Down	Down Counter - Aph Input acts as Down Clock - Bph Input is not used
B' 0100 (0x4)	Up Clock & Inhibit	Up Counter with Inhibit - Aph Input acts as Up Clock Input - Bph Input acts as Inhibit function for Up Clock Input
B' 0101 (0x5)	Up Clock & Reset	Up Counter with Reset - Aph Input acts as Up Clock Input - Bph Input acts as Reset function to Counter
B' 0110 (0x6)	Down Clock & Inhibit	Down Counter with Inhibit - Aph Input acts as Down Clock Input - Bph Input acts as Inhibit function for Down Clock Input
B' 0111 (0x7)	Down Clock & Reset	Down Counter with Reset - Aph Input acts as Down Clock Input - Bph Input acts as Reset function to Counter
B' 1000 (0x8)	Up Clock & Down Clock	Up & Down Counter - Aph Input acts as Up Clock Input - Bph Input acts as Down Clock Input
B' 1001 (0x9)	Clock & Direction	Up & Down with Direction - Aph Input acts as Clock Input - Bph Input acts as Direction Input (Low = Up Count, High = Down Count)
B' 1010 (0xA)	Encoder 4x (*1)	Encoder 4x - Aph Input acts as Encoder's A phase Input - Bph Input acts as Encoder's B phase Input

- This encoder mode is perfectly same with mode B'0000, B'0001. This is for using Encoder module easily.
- Frequency, B'1100(0xC) and B'1101(0xD) can't be used with other channel's Count Mode = 0x2 ~ 0x9
- Pulse Width, B'1110(0xE) measures Aph Input's High(On) Pulse Width(32bit) in 0.1usec unit.
- Pulse Width & Period, B'1111(0xF) measures Aph's Pulse High(On) Width(16bit) & Period(16bit) in 0.1usec unit.

URD-02PU (DO02PU) – 2 CH Pulse Output

Items	Specification
Number of channel	2 Channels
Number of output	2 Output, Push-pull Type
Indicators	4 Green LEDs - 2 Green Pulse LEDs - 2 Green Direction LEDs
Output Voltage	24Vdc
Output Current	0.5A per channel, 2.0A per Module Operating Temperature -40℃~45℃ : Max. 0.5A per channel 45℃~60℃ : Max. 0.3A per channel
Pulse output frequency	1-300kHz
Pulse output duty	About 50%
Pulse Output Quantity with One Command	Continuous Pulse Output, Max.+1~+2147483647: Pulse Direction Output OFF. Max.-1~-2147483647 : Pulse Direction Output ON.
Pulse Output Counter	Signed 32bit-wide
Function	Trapezoidal Acceleration
Protection	Short Protection
Common Type	4 Common, Field Power 0V is Common
Input Per Module	4 Point Sink Type
Indicators	4 Green Terminal Input LEDs
Input On-state Voltage	24Vdc nominal Min. 15Vdc to Max. 32Vdc
OFF-state Voltage	8.3Vdc @25℃
On-State Current	Max. 3.10mA/ point @ 32Vdc
Input Signal Delay	OFF to ON : Max. 0.3ms @24Vdc ON to OFF : Max. 0.3ms @24Vdc
Nominal Input Impedance	10.72KΩ
Power dissipation	Max. 75mA @ 5.0Vdc
Isolation	I/O to Logic : Photocoupler Isolation Field power : Non-Isolation
Field Power	Supply Voltage : 24Vdc nominal Voltage Range : 15~32Vdc Power Dissipation : Max. 45mA @ 24Vdc Except Load
Wiring	I/O Cable Max. 2.0mm^2(AWG 14)
Weight	63g
Module Size	12mm x 109mm x 70mm
Operating temperature	-40°C to 60°C (-40°F to 140°F)

1. Wiring Diagram

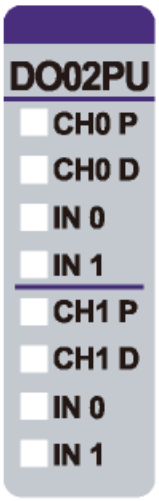

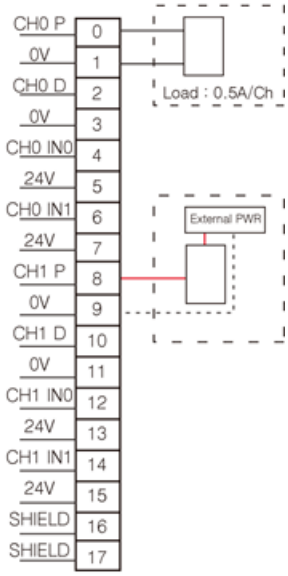

Pin No.	Signal Description	Pin No.	Signal Description
0	Pulse Output Channel #0	9	Field Power 0V, Common
1	Field Power 0V, Common	10	Direction Output Channel #1
2	Direction Output Channel #0	11	Field Power 0V, Common
3	Field Power 0V, Common	12	Emergency Stop Input Channel #1
4	Emergency Stop Input Channel #0	13	Field Power 24V, Common
5	Field Power 24V, Common	14	Digital Input Channel #1
6	Digital Input Channel #0	15	Field Power 24V, Common
7	Field Power 24V, Common	16	Shield
8	Pulse Output Channel #1	17	Shield

2. LED Indicators

LED No.	LED Function / Description	LED Color
0	Pulse Output Channel #0	Green
1	Direction Output Channel #0	Green
2	Emergency Stop Input #0	Green
3	Digital Input Channel #0	Green
4	Pulse Output Channel #1	Green
5	Direction Output Channel #1	Green
6	Emergency Stop Input #1	Green
7	Digital Input Channel #1	Green

Status	LED	Indication
No Signal	Off	Normal Operation
On Signal	Green	Normal Operation

URD-02PW (DO02PW) – 2 CH PWM Output

Items	Specification
Number of channel	2 Channels
Number of output	2 Output, Push-pull Type
Indicators	2 Green Pulse Output LED
Output Voltage	24Vdc
Output current	0.5A per channel, 1.0A per Module Operating Temperature -40℃~45℃ : Max. 0.5A per channel 45℃~60℃ : Max. 0.3A per channel
Pulse output frequency	1-5kHz±0.5%
Pulse output duty	0.0-100.0% ±1.0% (0.1%/1LSB), Ton>1us, Toff>1us
Protection	Short Protection
Common Type	2 Common, Field Power 0V is Common
Power dissipation	Max. 75mA @ 5.0Vdc
Isolation	I/O to Logic : Photocoupler Isolation Field power : Non-Isolation
Field Power	Supply Voltage : 24Vdc nominal Voltage Range : 15~32Vdc Power Dissipation : Max. 10mA @ 24Vdc Except Load
Wiring	I/O Cable Max. 2.0mm^2(AWG 14)
Weight	63g
Module Size	12mm x 109mm x 70mm
Operating temperature	-40°C to 60°C (-40°F to 140°F)

1. Wiring Diagram

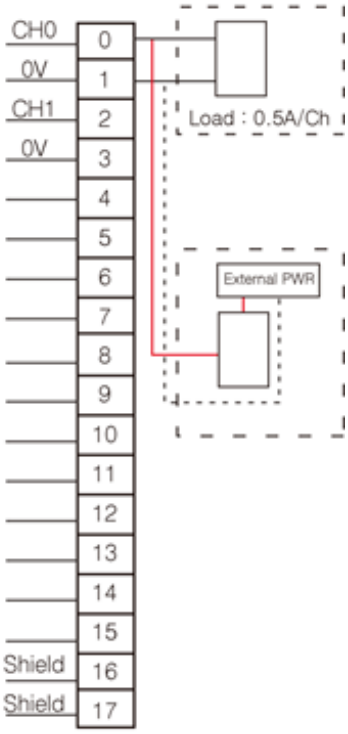

Pin No.	Signal Description	Pin No.	Signal Description
0	PWM Output Channel #0	9	N.C.
1	Field Power 0V, Common	10	N.C.
2	PWM Output Channel #1	11	N.C.
3	Field Power 0V, Common	12	N.C.
4	N.C.	13	N.C.
5	N.C.	14	N.C.
6	N.C.	15	N.C.
7	N.C.	16	Shield
8	N.C.	17	Shield

*N.C : Not Connected.

2. LED Indicators

LED No.	LED Function / Description	LED Color
0	PWM Output Channel #0	Green
1	PWM Output Channel #1	Green

Status	LED	Indication
No Signal	Off	Normal Operation
On Signal	Green	Normal Operation

URD-04PW (DO04PW) – 4 CH PWM Output

Items	Specification
Number of channel	4 Channels
Number of output	4 Output, Push-pull Type
Indicators	4 Green Pulse Output LED
Output Voltage	24Vdc
Output current	0.5A per channel, 2.0A per Module Operating Temperature -40℃~45℃ : Max. 0.5A per channel 45℃~60℃ : Max. 0.3A per channel
Pulse output frequency	1-5kHz±0.5%
Pulse output duty	0.0-100.0% ±1.0% (0.1%/1LSB), Ton>1us, Toff>1us
Protection	Short Protection
Common Type	4 Common, Field Power 0V is Common
Power dissipation	Max. 75mA @ 5.0Vdc
Isolation	I/O to Logic : Photocoupler Isolation Field power : Non-Isolation
Field Power	Supply Voltage : 24Vdc nominal Voltage Range : 15~32Vdc Power Dissipation : Max. 15mA @ 24Vdc Except Load
Wiring	I/O Cable Max. 2.0mm^2(AWG 14)
Weight	63g
Module Size	12mm x 109mm x 70mm
Operating temperature	-40°C to 60°C (-40°F to 140°F)

1. Wiring Diagram

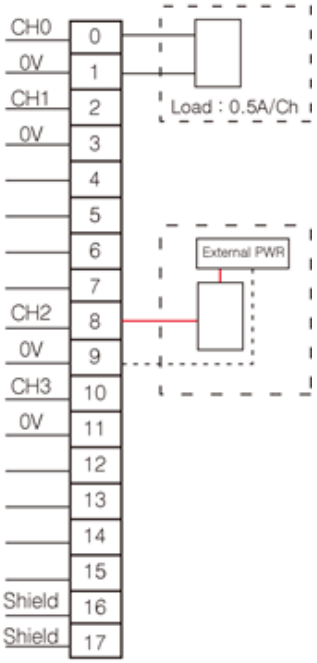

Pin No.	Signal Description	Pin No.	Signal Description
0	PWM Output Channel #0	9	Field Power 0V, Common
1	Field Power 0V, Common	10	PWM Output Channel #3
2	PWM Output Channel #1	11	Field Power 0V, Common
3	Field Power 0V, Common	12	N.C.
4	N.C.	13	N.C.
5	N.C.	14	N.C.
6	N.C.	15	N.C.
7	N.C.	16	Shield
8	PWM Output Channel #2	17	Shield

*N.C : Not Connected.

2. LED Indicators

LED No.	LED Function / Description	LED Color
0	PWM Output Channel #0	Green
1	PWM Output Channel #1	Green
2	PWM Output Channel #2	Green
3	PWM Output Channel #3	Green

Status	LED	Indication
No Signal	Off	Normal Operation
On Signal	Green	Normal Operation

URD-0008CH (DO08CH) - 8 Digital Outputs (Source)

Items	Specification
Outputs per module	8 Points, Sink type
Indicators(Logic side)	8 Green Output status
Output Voltage Range	Nominal 24VDC Min. 15VDC to Max. 32VDC
ON-state voltage drop	Max. 0.5VDC @ 25 ºC, 70 ºC (158°F), -40 ºC (-40°F)
Field Power OFF-state voltage	4.6Vdc @ 25 ºC (77°F)
ON-State Min. Current	1mA per output
OFF-State Leakage current	Max. 25uA
Output Signal Delay	OFF to ON : 0.3ms maximum ON to OFF : 0.3ms maximum
Output Current Rating	Max. 0.5A per channel / Max. 4A per unit
Protection	Over Current limit : Min 6.5A@ 25 ºC (77°F) per each outputs Thermal Shutdown : Min 4A@ 25 ºC (77°F) per each outputs Short circuit protection
COMMON Type	8 points / Internal 2Com
Power dissipation	40mA maximum @ 5.0VDC
Isolation	I/O to Logic : Isolation Field Power : Non-isolation
Field Power	Supply voltage : 24VDC nominal Voltage range : 15 to 32VDC Power dissipation: 10mA @ 24VDC
Wiring	I/O Cable Max. 2.0mm^2 (AWG 14)
Weight	40g
Module Size	12mm x 99mm x 70mm
Operating temperature	-40°C to 70°C (-40°F to 158°F)

1. Wiring Diagram

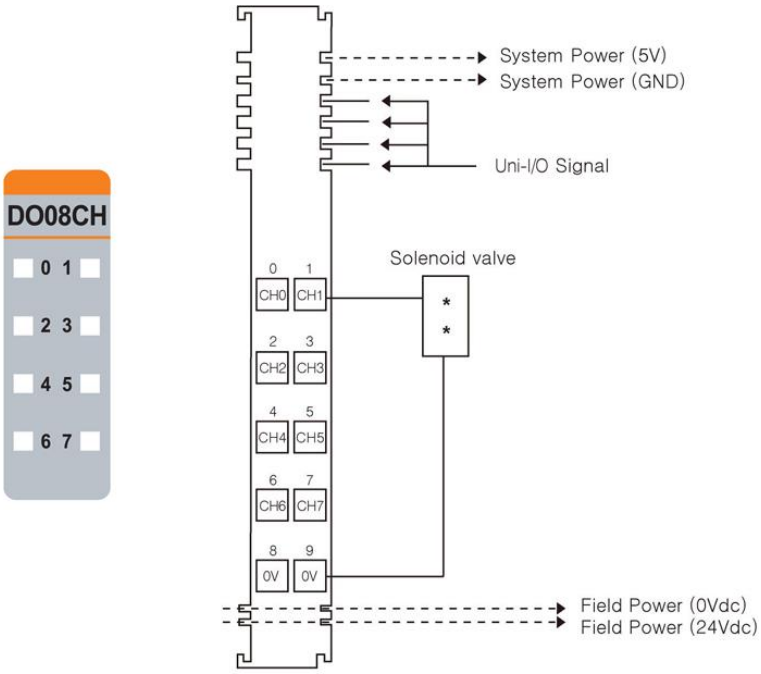

Pin No.	Signal Description	Pin No.	Signal Description
0	Output 0	1	Output 1
2	Output 2	3	Output 3
4	Output 4	5	Output 5
6	Output 6	7	Output 7
8	Common (Field Power 0V)	9	Common (Field Power 0V)

2. LED Indicators

LED No.	LED Function / Description	LED Color
0	Output 0	Green
1	Output 1	Green
2	Output 2	Green
3	Output 3	Green
4	Output 4	Green
5	Output 5	Green
6	Output 6	Green
7	Output 7	Green

Status	LED	Indication
No Signal	Off	Normal Operation
On Signal	Green	Normal Operation

URD-0008CI (DO08CI) - 8 Digital Outputs, (Source)

Items	Specification
Outputs per module	8 Points, Sink type
Indicators(Logic side)	8 Green Output status
Output Voltage Range	Nominal 24VDC Min. 15VDC to Max. 28.8VDC
ON-state voltage drop	Max. 1VDC @ 25 ºC (77°F)
ON-State Min. Current	1mA per output
OFF-State Leakage current	Max. 150uA
Output Signal Delay	OFF to ON : 0.3ms maximum ON to OFF : 0.3ms maximum
Output Current Rating	Max. 2A per channel Operating Temperature -40°C to 50°C (-40°F to 122°F) : Max. 10A per unit 50°C to 60°C (122°F to 140°F) : Max. 7A per unit 60°C to 70°C (140°F to 158°F) : Max. 4.8A per unit
COMMON Type	8 points / Internal 2Com
Power dissipation	45mA maximum @ 5.0VDC
Isolation	I/O to Logic : Isolation Field Power : Non-isolation
Field Power	Supply voltage : 24VDC nominal Voltage range : 15 to 32VDC Power dissipation: 30mA @ 24VDC
Wiring	I/O Cable Max. 2.0mm^2 (AWG 14)
Weight	70g
Module Size	12mm x 99mm x 70mm
Operating temperature	-40°C to 70°C (-40°F to 158°F)

1. Wiring Diagram

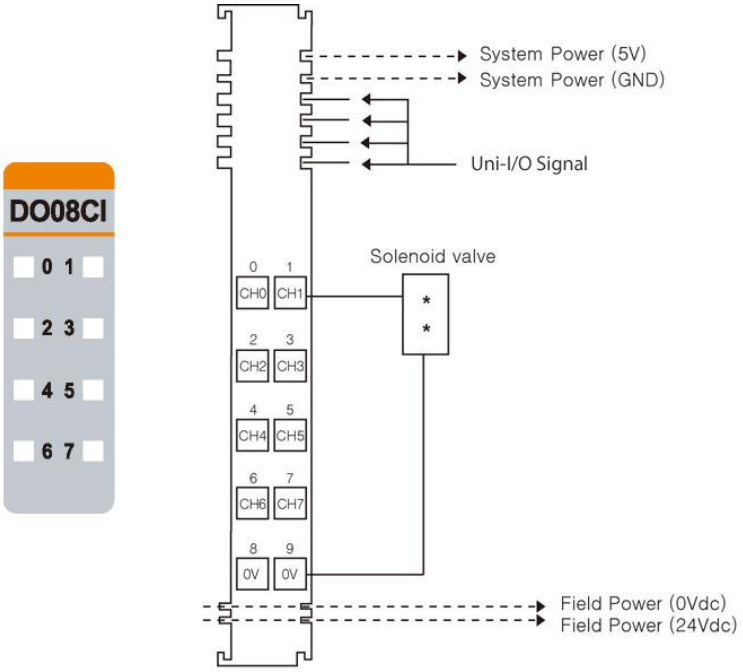

Pin No.	Signal Description	Pin No.	Signal Description
0	Output 0	1	Output 1
2	Output 2	3	Output 3
4	Output 4	5	Output 5
6	Output 6	7	Output 7
8	Common (Field Power 0V)	9	Common (Field Power 0V)

2. LED Indicators

LED No.	LED Function / Description	LED Color
0	Output 0	Green
1	Output 1	Green
2	Output 2	Green
3	Output 3	Green
4	Output 4	Green
5	Output 5	Green
6	Output 6	Green

Status	LED	Indication
No Signal	Off	Normal Operation
On Signal	Green	Normal Operation

URD-0016CG-8 (DO16C8) - 16 Digital Outputs, (Source)

Items	Specification
Outputs per module	16 Points Source type
Indicators(Logic side)	8 Green Output status
Output Voltage Range	Nominal 24VDC Min. 15VDC to Max. 32VDC
ON-state voltage drop	Max. 0.3Vdc @ 25 ºC (77°F) / 0.5Vdc@ 70 ºC (158°F)
ON-State Min. Current	1mA per output
OFF-State Leakage current	Max. 5uA
Output Signal Delay	OFF to ON : 0.3ms maximum ON to OFF : 0.3ms maximum
Output Current Rating	Max. 0.3A per channel / Max. 4.8A per unit
COMMON Type	16 points / 2COM (Single Common)
Power dissipation	50mA maximum @ 5.0VDC
Isolation	I/O to Logic : Photocoupler isolation
Field Power	Supply voltage : 24VDC nominal Voltage range : 15 to 32VDC Power dissipation: 40mA @ 32VDC
Wiring	I/O Cable Max. 0.32mm^2 (AWG 22)
Weight	52g
Module Size	12mm x 99mm x 70mm
Operating temperature	-40°C to 70°C (-40°F to 158°F)

1. Wiring Diagram

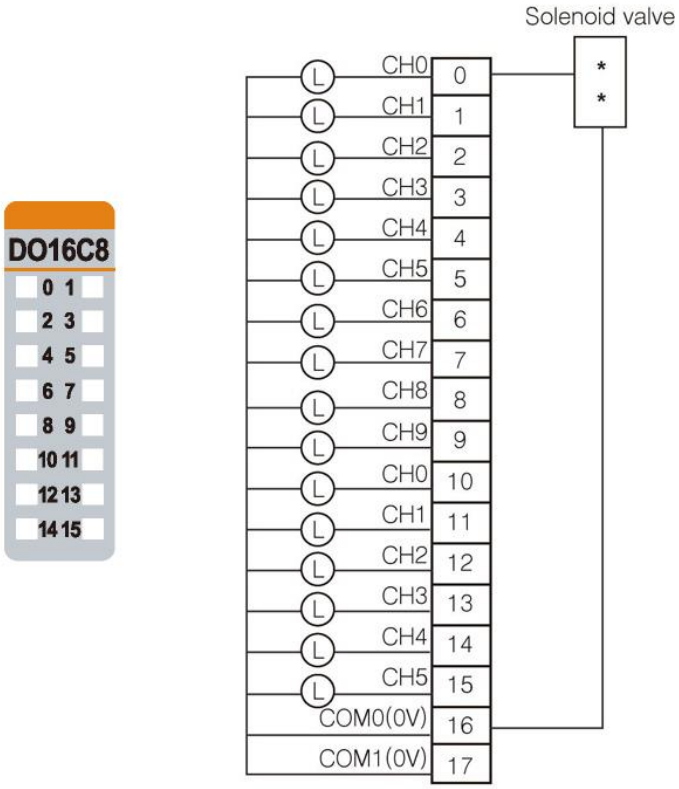

Pin No.	Signal Description	Pin No.	Signal Description
0	Output 0	1	Output 1
2	Output 2	3	Output 3
4	Output 4	5	Output 5
6	Output 6	7	Output 7
8	Output 8	9	Output 9
10	Output 10	11	Output 11
12	Output 12	13	Output 13
14	Output 14	15	Output 15
16	Common (Field Power 0V)	17	Common (Field Power 0V)

2. LED Indicators

LED No.	LED Function / Description	LED Color
0	Output 0	Green
1	Output 1	Green
2	Output 2	Green
3	Output 3	Green
4	Output 4	Green
5	Output 5	Green
6	Output 6	Green
7	Output 7	Green
8	Output 8	Green
9	Output 9	Green
10	Output 10	Green
11	Output 11	Green
12	Output 12	Green
13	Output 13	Green
14	Output 14	Green
15	Output 15	Green

Status	LED	Indication
No Signal	Off	Normal Operation
On Signal	Green	Normal Operation

URD-0032CG-4 (DO32C4) - 32 Digital Outputs, (Source)

Items	Specification
Outputs per module	32 Points Source type
Indicators(Logic side)	32 Green Output status
Output Voltage Range	Nominal 24VDC Min. 15VDC to Max. 32VDC
ON-state voltage drop	Max. 0.3Vdc @ 25 ºC (77°F) / 0.5Vdc@ 60 ºC (140°F)
ON-State Min. Current	Min. 1mA / Channel
OFF-State Leakage current	Max. 5uA
Output Signal Delay	OFF to ON : 0.3ms maximum ON to OFF : 0.3ms maximum
Output Current Rating	Max. 0.3A per channel /Max. 6.0A per unit
COMMON Type	32 points / 4 Common
Power dissipation	65mA maximum @ 5.0VDC
Isolation	I/O to Logic : Photocoupler Isolation Field Power : Non-Isolation
Field Power	Supply voltage : 24VDC nominal Voltage range : 15 to 32VDC Power dissipation: 30mA @ 32VDC
Wiring	Module connector : HIF3BA-40D-2.54R
Weight	63g
Module Size	12mm x 109mm x 70mm
Operating temperature	-40°C to 70°C (-40°F to 158°F)

1. Wiring Diagram

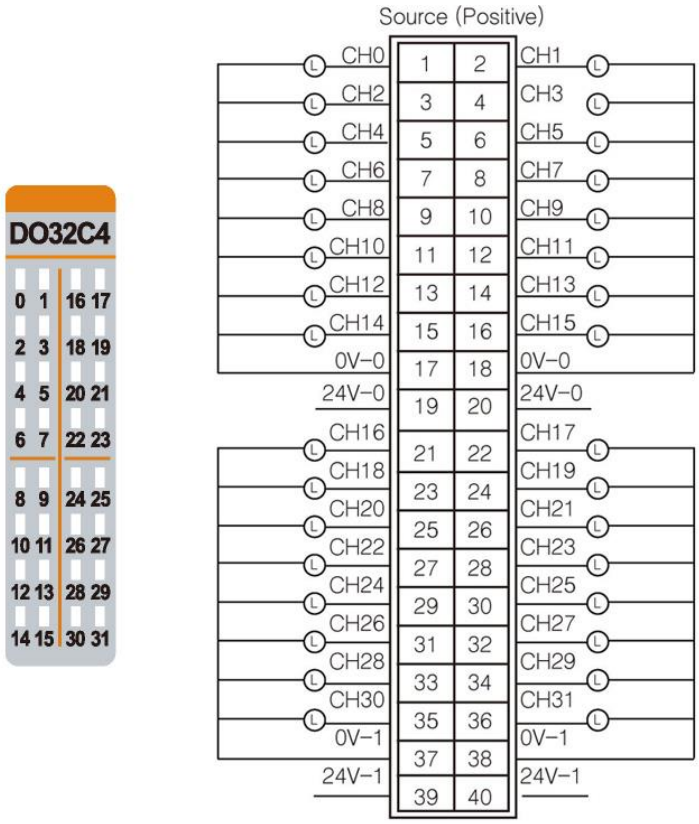

Pin No.	Signal Description	Pin No.	Signal Description
1	Output 0	2	Output 1
3	Output 2	4	Output 3
5	Output 4	6	Output 5
7	Output 6	8	Output 7
9	Output 8	10	Output 9
11	Output 10	12	Output 11
13	Output 12	14	Output 13
15	Output 14	16	Output 15
17	Common (Field Power 0V)	18	Common (Field Power 0V)
19	Common (Field Power 24V)	20	Common (Field Power 24V)
21	Output 16	22	Output 17
23	Output 18	24	Output 19
25	Output 20	26	Output 21
27	Output 22	28	Output 23
29	Output 24	30	Output 25
31	Output 26	32	Output 27
33	Output 28	34	Output 29
35	Output 30	36	Output 31
37	Common (Field Power 0V)	38	Common (Field Power 0V)
39	Common (Field Power 24V)	40	Common (Field Power 24V)

2. LED Indicators

LED No.	LED Function / Description	LED Color
0	Output 0	Green
1	Output 1	Green
2	Output 2	Green
3	Output 3	Green
4	Output 4	Green
5	Output 5	Green
6	Output 6	Green
7	Output 7	Green
8	Output 8	Green
9	Output 9	Green
10	Output 10	Green
11	Output 11	Green
12	Output 12	Green
13	Output 13	Green
...	...	...
31	Output 31	Green

Status	LED	Indication
No Signal	Off	No Output Signal
On Signal	Green	Normal Operation

URD-0008NH (DO08NH) - 8 Digital Outputs, (Sink)

Items	Specification
Outputs per module	8 Points, Sink type
Indicators(Logic side)	8 Green Output status
Output Voltage Range	Nominal 24VDC Min. 15VDC to Max. 32VDC
ON-state voltage drop	Max. 0.5VDC @ 25 ºC (77°F)
ON-State Min. Current	1mA per output
OFF-State Leakage current	Max. 25uA
Output Signal Delay	OFF to ON : 0.3ms maximum ON to OFF : 0.3ms maximum
Output Current Rating	Max. 0.5A per output / Max. 4A per unit
Protection	Over Current limit: Min. 3.5A@ 25 ºC (77°F) per each outputs Thermal Shutdown : Min 3A@ 25 ºC (77°F) per each outputs Short circuit protection
COMMON Type	8 points / Internal 2Com
Power dissipation	45mA maximum @ 5.0VDC
Isolation	I/O to Logic : Isolation Field power : Non-isolation
Field Power	Supply voltage : 24VDC nominal Voltage range : 15 to 32VDC Power dissipation: 5mA @32.0VDC
Wiring	I/O Cable Max. 2.0mm^2 (AWG 14)
Weight	39g
Module Size	12mm x 99mm x 70mm
Operating temperature	-40°C to 70°C (-40°F to 158°F)

1. Wiring Diagram

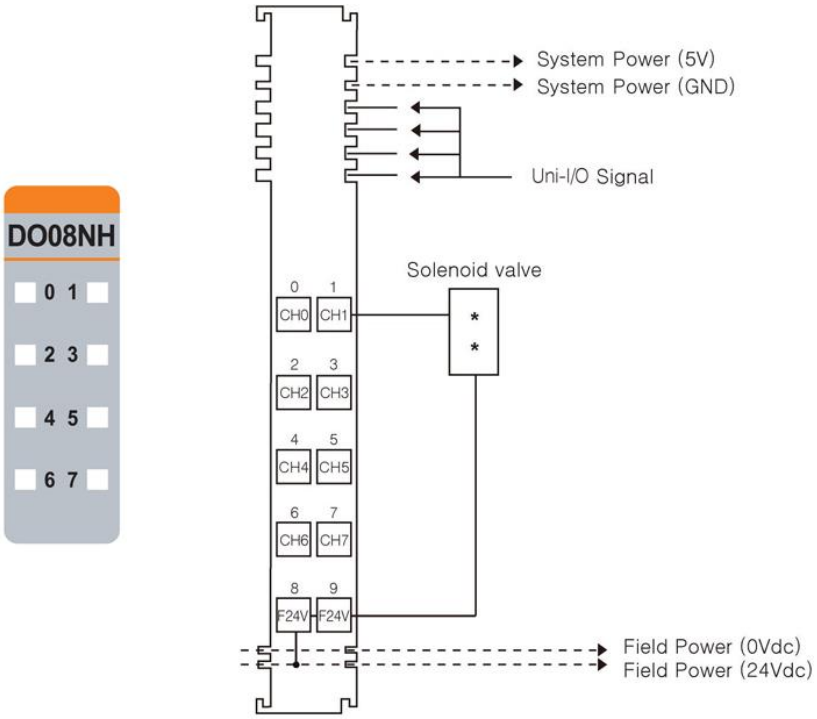

Pin No.	Signal Description	Pin No.	Signal Description
0	Output 0	1	Output 1
2	Output 2	3	Output 3
4	Output 4	5	Output 5
6	Output 6	7	Output 7
8	Common (Field Power 24V)	9	Common (Field Power 24V)

2. LED Indicators

LED No.	LED Function / Description	LED Color
0	Output 0	Green
1	Output 1	Green
2	Output 2	Green
3	Output 3	Green
4	Output 4	Green
5	Output 5	Green
6	Output 6	Green
7	Output 7	Green

Status	LED	Indication
No Signal	Off	Normal Operation
On Signal	Green	Normal Operation

URD-0008NI (DO08NI) - 8 Digital Outputs, (Sink)

Items	Specification
Outputs per module	8 Points, Sink type
Indicators(Logic side)	8 Green Output status
Output Voltage Range	Nominal 24VDC Min. 11VDC to Max. 28.8VDC
ON-state voltage drop	Max. 1Vdc @ 25 ºC (77°F)
ON-State Min. Current	1mA per channel
OFF-State Leakage current	Max. 150uA
Output Signal Delay	OFF to ON : 0.3ms maximum ON to OFF : 0.3ms maximum
Output Current Rating	Max. 2A per channel Operating Temperature -40°C to 50°C (-40°F to 122°F): Max. 10A per unit 50°C to 60°C (122°F to 140°F): Max. 7A per unit 60°C to 70°C (140°F to 158°F): Max. 4.8A per unit
COMMON Type	8 points / Internal 2Com
Power dissipation	50mA maximum @ 5.0VDC
Isolation	I/O to Logic : Isolation Field power : Non-isolation
Field Power	Supply voltage : 24VDC nominal Voltage range : 15 to 32VDC Power dissipation: 30mA @32.0VDC
Wiring	I/O Cable Max. 2.0mm^2 (AWG 14)
Weight	70g
Module Size	12mm x 99mm x 70mm
Operating temperature	-40°C to 70°C (-40°F to 158°F)

1. Wiring Diagram

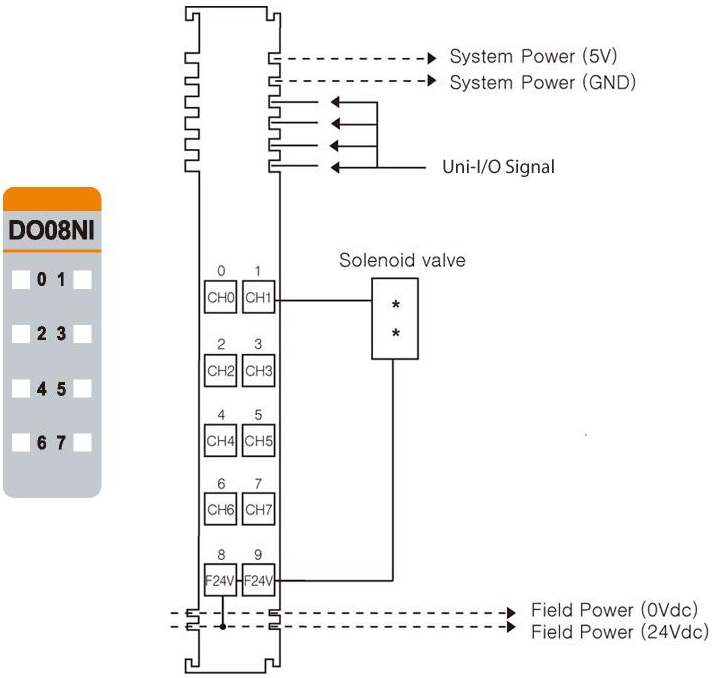

Pin No.	Signal Description	Pin No.	Signal Description
0	Output 0	1	Output 1
2	Output 2	3	Output 3
4	Output 4	5	Output 5
6	Output 6	7	Output 7
8	Common (Field Power 24V)	9	Common (Field Power 24V)

2. LED Indicators

LED No.	LED Function / Description	LED Color
0	Output 0	Green
1	Output 1	Green
2	Output 2	Green
3	Output 3	Green
4	Output 4	Green
5	Output 5	Green
6	Output 6	Green

Status	LED	Indication
No Signal	Off	Normal Operation
On Signal	Green	Normal Operation

URD-0016NG-8 (DO16N8) - 16 Digital Outputs, (Sink)

Items	Specification
Outputs per module	16 Points Sink type
Indicators	16 Green output state
Output Voltage Range	Nominal 24VDC Min. 15VDC to Max. 32VDC
ON-state voltage drop	Max. 0.3Vdc @ 25 ºC (77°F) / 0.5Vdc@ 70 ºC (158°F)
ON-State Min. Current	1mA per channel
OFF-State Leakage current	Max. 20uA
Output Signal Delay	OFF to ON : 0.3ms maximum ON to OFF : 0.3ms maximum
Output Current Rating	Max. 0.3A per channel / Max. 4.8A per unit
COMMON Type	16 points / 2COM
Power dissipation	50mA maximum @ 5.0VDC
Isolation	I/O to Logic : Photocoupler isolation
Field Power	Supply voltage : 24VDC nominal Voltage range : 15 to 32VDC Power dissipation: 30mA @32.0VDC
Wiring	I/O Cable Max. 0.75mm^2 (AWG 18)
Weight	63g
Module Size	12mm x 109mm x 70mm
Operating temperature	-40°C to 70°C (-40°F to 158°F)

1. Wiring Diagram

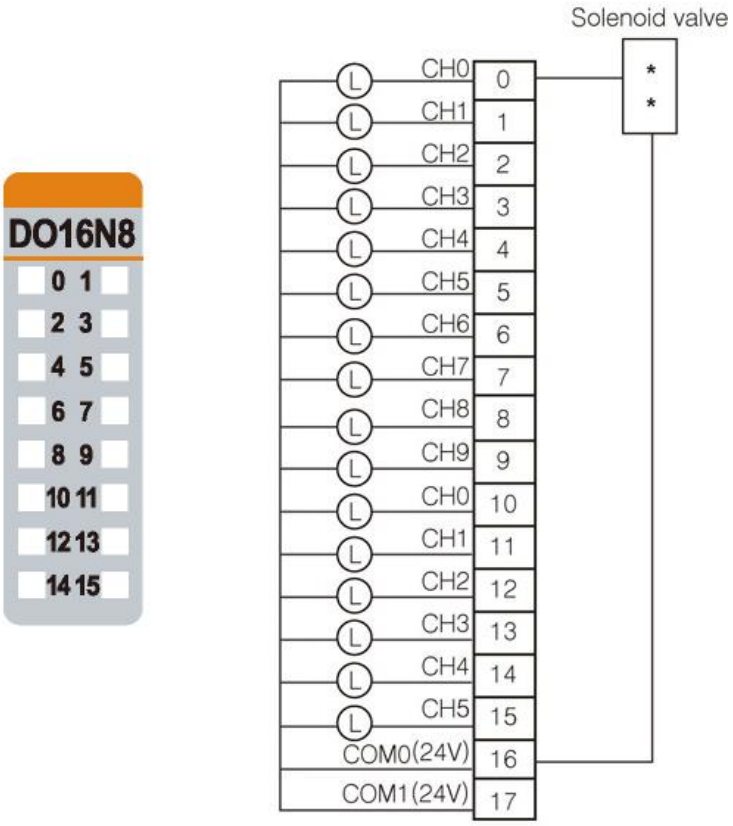

Pin No.	Signal Description	Pin No.	Signal Description
0	Output 0	1	Output 1
2	Output 2	3	Output 3
4	Output 4	5	Output 5
6	Output 6	7	Output 7
8	Output 8	9	Output 9
10	Output 10	11	Output 11
12	Output 12	13	Output 13
14	Output 14	15	Output 15
16	Common (Field Power 24V)	17	Common (Field Power 24V)

2. LED Indicators

LED No.	LED Function / Description	LED Color
0	Output 0	Green
1	Output 1	Green
2	Output 2	Green
3	Output 3	Green
4	Output 4	Green
5	Output 5	Green
6	Output 6	Green
7	Output 7	Green
8	Output 8	Green
9	Output 9	Green
10	Output 10	Green
11	Output 11	Green
12	Output 12	Green
13	Output 13	Green
14	Output 14	Green
15	Output 15	Green

Status	LED	Indication
No Signal	Off	Normal Operation
On Signal	Green	Normal Operation

URD-0032NG-4 (DO32N4) - 32 Digital Outputs, (Sink)

Items	Specification
Outputs per module	32 Points Sink Type
Indicators	32 Green Output Status LEDs
Output Voltage Range	24VDC Min. 15VDC to Max. 32VDC
ON-state voltage drop	Max. 0.3Vdc @ 25 ºC (77°F) / 0.5Vdc @ 60 ºC (140°F)
ON-State Min. Current	Min. 1mA / Channel
OFF-State Leakage current	Max. 25uA
Output Signal Delay	OFF to ON : 0.3ms maximum ON to OFF : 0.3ms maximum 0ch~15ch < 16ch~31ch : max. 20us
Output Current Rating	Max. 0.3A per channel / Max. 6.0A per unit
COMMON Type	32 points / 4 Common
Power dissipation	65mA maximum @ 5.0VDC
Isolation	I/O to Logic : Photocoupler Isolation Field Power : Non-Isolation
Field Power	Supply voltage : 24VDC nominal Voltage range : 15 to 32VDC Power dissipation: 10mA @32.0VDC
Wiring	Module connector : HIF3BA-40D-2.54R
Weight	59g
Module Size	12mm x 109mm x 70mm
Operating temperature	-40°C to 70°C (-40°F to 158°F)

1. Wiring Diagram

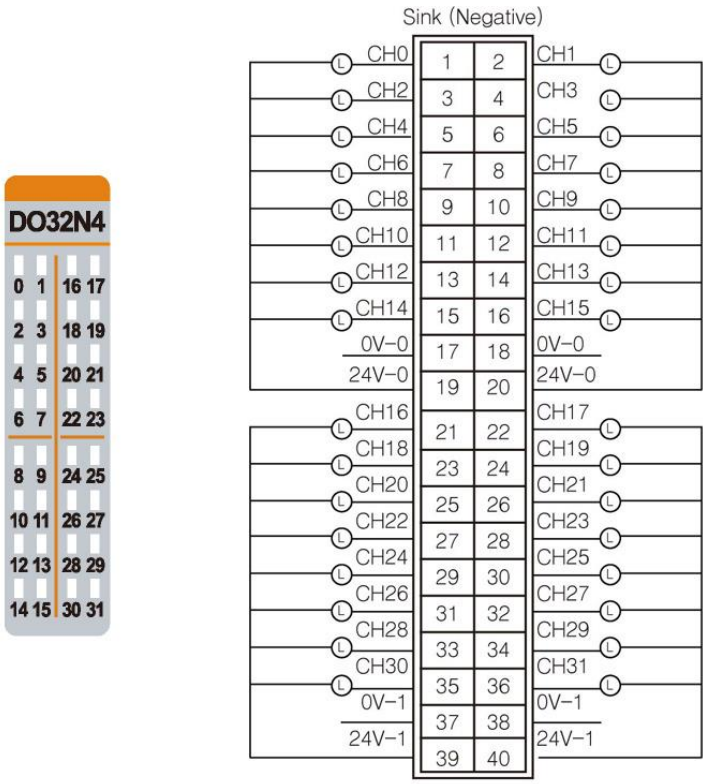

Pin No.	Signal Description	Pin No.	Signal Description
1	Output 0	2	Output 1
3	Output 2	4	Output 3
5	Output 4	6	Output 5
7	Output 6	8	Output 7
9	Output 8	10	Output 9
11	Output 10	12	Output 11
13	Output 12	14	Output 13
15	Output 14	16	Output 15
17	Common (Field Power 0V)	18	Common (Field Power 0V)
19	Common (Field Power 24V)	20	Common (Field Power 24V)
21	Output 16	22	Output 17
23	Output 18	24	Output 19
25	Output 20	26	Output 21
27	Output 22	28	Output 23
29	Output 24	30	Output 25
31	Output 26	32	Output 27
33	Output 28	34	Output 29
35	Output 30	36	Output 31
37	Common (Field Power 0V)	38	Common (Field Power 0V)
39	Common (Field Power 24V)	40	Common (Field Power 24V)

2. LED Indicators

LED No.	LED Function / Description	LED Color
0	Output 0	Green
1	Output 1	Green
2	Output 2	Green
3	Output 3	Green
4	Output 4	Green
5	Output 5	Green
6	Output 6	Green
7	Output 7	Green
8	Output 8	Green
9	Output 9	Green
10	Output 10	Green
11	Output 11	Green
12	Output 12	Green
13	Output 13	Green

Status	LED	Indication
No Signal	Off	No Output Signal
On Signal	Green	Normal Operation

URD-0004RH (DO04RH) - 4 Relay Outputs

Items	Specification
Output per module	4 Points, Bi-directional
Indicators (Logic side)	4 Green Output state
Relay Type	Form A, Single Pole Single Throw (SPST)
Output Voltage Range (Load Dependent)	0~32VDC @ 2.0A resistive 48VDC @ 0.8A resistive 110VDC @ 0.5A resistive Max. 240VAC @ 2.0A resistive
Output Current Rating (At rated power)	2.0A @ 0~32VDC 0.8A @ 48VDC 0.5A @ 110VDC 2.0A @ 240VAC -40 ºC to 70 ºC (-40°F to 158°F) (2A Load 2ch) -40 ºC to 60 ºC (-40°F to 140°F) (2A Load 4ch)
Output Delay Time (resistive load)	OFF to ON: Max. 5ms @ 24VDC ON to OFF: Max. 8ms @ 24VDC OFF to ON: Max. 5ms @ 220VAC ON to OFF: Max. 15ms @ 220VAC
Expected Contact Life	20M Cycles (Resistive)
Frequency Range (VAC)	47Hz ~ 63Hz
Max. On-State Voltage Drop*	0.5V @ 2.0A, Resistive Load, 24VDC
Commons Type	4Points / 2COM (Single Common)
Power dissipation	35mA @ 5.0VDC
Isolation	I/O to Logic : Isolation Field Power : Non-isolation
Field Power	Supply voltage : 24VDC nominal Voltage range : 22 to 26VDC Power dissipation: 30mA @ 24VDC (AC Power Not used)
Wiring	I/O Cable Max. $2.0mm^2$ (AWG 14)
Weight	58g
Module Size	12mm x 99mm x 70mm
Operating temperature	-40°C to 70°C (-40°F to 158°F)

1. Wiring Diagram

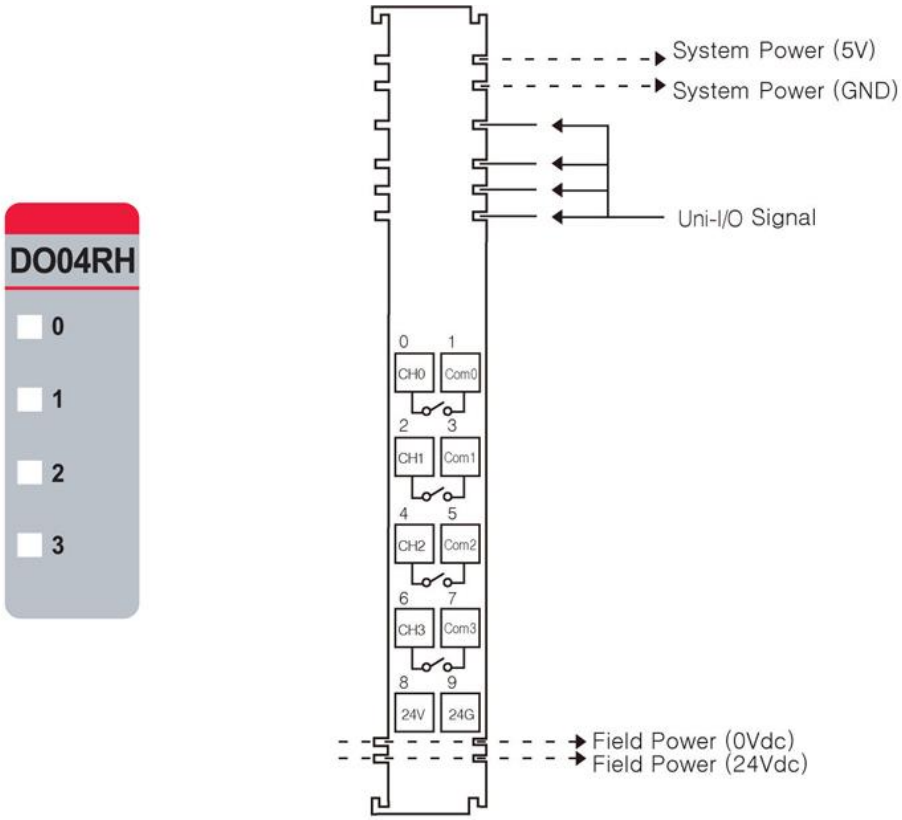

Pin No.	Signal Description	Pin No.	Signal Description
0	Output 0	1	COM 0
2	Output 1	3	COM 1
4	Output 2	5	COM 2
6	Output 3	7	COM 3
8	Field Power 24V	9	Field Power 0V

2. LED Indicators

LED No.	LED Function / Description	LED Color
0	Output 0	Green
1	Output 1	Green
2	Output 2	Green
3	Output 3	Green

Status	LED	Indication
No Signal	Off	Normal Operation
On Signal	Green	Normal Operation

URD-0004SK (DO04SK) - 4 Solid State Relay

Items	Specification
Output per module	4 Points, Bi-directional
Indicators (Logic side)	4 Green Output state
Relay Type	MOS Relay (Solid State Relay)
Output Voltage Range (Load Dependent)	Max. 240VAC @ 0.5A resistive Max. 240VDC @ 0.5A resistive
Output Delay Time (resistive load)	Max. AC/DC : 240V OFF to ON : Max. 0.6ms ON to OFF : Max. 3ms
Output Current Rating	Max. 0.5A per channel
Frequency Range (VAC)	47Hz ~ 63Hz
Commons Type	4Points / 2COM (Single Common)
Power dissipation	80mA @ 5.0VDC
Isolation	I/O to Logic : Isolation Field Power : Non-isolation
Field Power	Supply Voltage : 24VDC Voltage Range : 15 ~ 32VDC (AC Power Not Used)
Wiring	I/O Cable Max. 2.0mm^2 (AWG 14)
Weight	58g
Module Size	12mm x 99mm x 70mm
Operating temperature	-40°C to 70°C (-40°F to 158°F)

1. Wiring Diagram

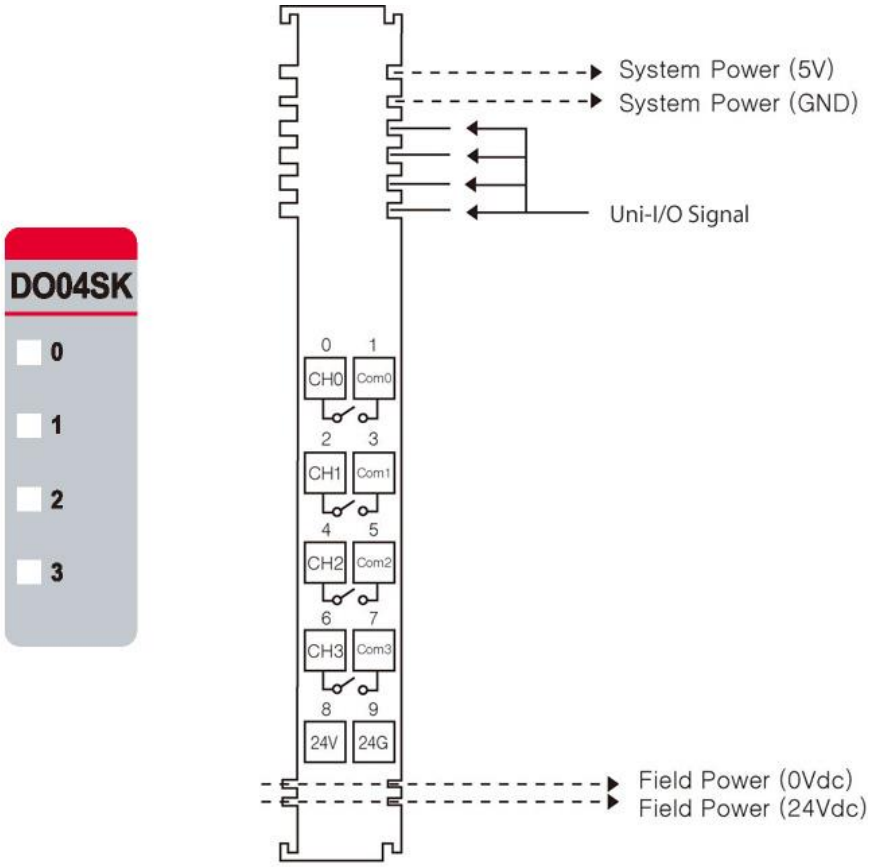

Pin No.	Signal Description	Pin No.	Signal Description
0	Output 0	1	COM 0
2	Output 1	3	COM 1
4	Output 2	5	COM 2
6	Output 3	7	COM 3
8	Field Power 24V	9	Field Power 0V

2. LED Indicators

LED No.	LED Function / Description	LED Color
0	Output 0	Green
1	Output 1	Green
2	Output 2	Green
3	Output 3	Green

Status	LED	Indication
No Signal	Off	No Output Signal
On Signal	Green	Normal Operation

URD-0004SM (DO04SM) - 4 Solid State Relay

Items	Specification
Output per module	4 Points, Bi-directional
Indicators (Logic side)	4 Green Output state
Relay Type	MOS Relay (Solid State Relay)
Output Voltage Range (Load Dependent)	Max. 110VAC @ 1A resistive Max. 110VDC @ 1A resistive
Output Delay Time (resistive load)	AC: OFF to ON : Max. 1ms ON to OFF : Max. 3ms DC: OFF to ON : Max. 1.5ms ON to OFF : Max. 3ms
Output Current Rating	Max. 1A per channel 60 ºC (140°F) : 0.8A per channel 50 ºC (122°F) : 1A per channel
Frequency Range (VAC)	47Hz ~ 63Hz
Commons Type	4Points / 2COM (Single Common)
Power dissipation	80mA @ 5.0VDC
Isolation	I/O to Logic : Isolation Field Power : Non-isolation
Field Power	Supply Voltage : 24VDC Voltage Range : 15 ~ 32VDC (AC Power Not Used)
Wiring	I/O Cable Max. 2.0mm^2 (AWG 14)
Weight	58g
Module Size	12mm x 99mm x 70mm
Operating temperature	-40°C to 60°C (-40°F to 140°F)

1. Wiring Diagram

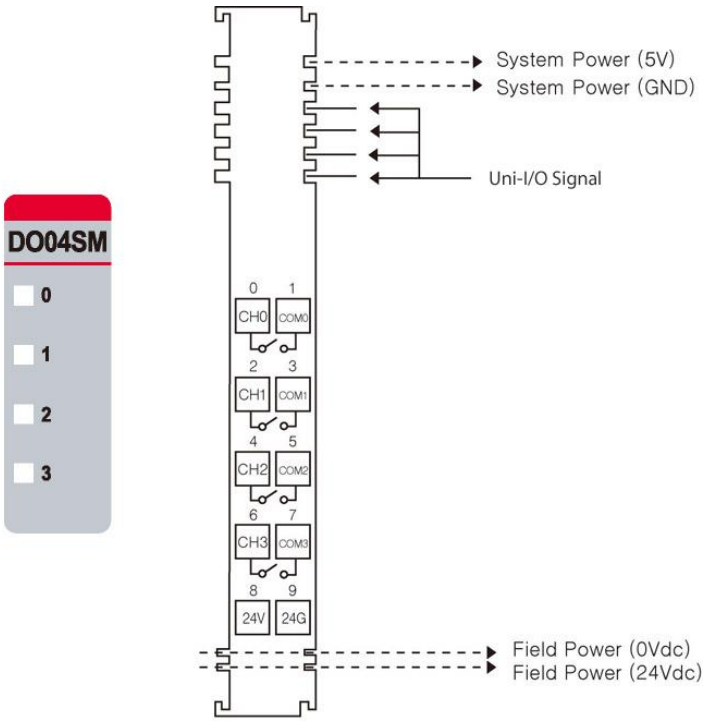

Pin No.	Signal Description	Pin No.	Signal Description
0	Output 0	1	COM 0
2	Output 1	3	COM 1
4	Output 2	5	COM 2
6	Output 3	7	COM 3
8	Field Power 24V	9	Field Power 0V

2. LED Indicators

LED No.	LED Function / Description	LED Color
0	Output 0	Green
1	Output 1	Green
2	Output 2	Green
3	Output 3	Green

Status	LED	Indication
Not Signal	Off	No Output Signal
On Signal	Green	Normal Operation

URD-0004SN (DO04SN) - 4 Solid State Relay

Items	Specification
Output per module	4 Points, Bi-directional
Indicators (Logic side)	4 Green Output state
Relay Type	MOS Relay (Solid State Relay)
Output Voltage Range (Load Dependent)	Max. 24VAC @ 2A resistive Max. 24VDC @ 2A resistive
Output Delay Time (resistive load)	AC: OFF to ON : Max. 1ms ON to OFF : Max. 3ms DC: OFF to ON : Max. 1 ms ON to OFF : Max. 3.5ms
Output Current Rating	Max. 2A per channel -40°C to 70°C (-40°F to 158°F) : Max. 7A per unit -40°C to 50°C (-40°F to 122°F) : Max. 8A per unit
Frequency Range (VAC)	47Hz ~ 63Hz
Commons Type	4Points / 2COM (Single Common)
Power dissipation	80mA @ 5.0VDC
Isolation	I/O to Logic : Isolation Field Power : Non-isolation
Field Power	Supply Voltage : 24VDC Voltage Range : 15 ~ 32VDC (AC Power Not Used)
Wiring	I/O Cable Max. 2.0mm^2 (AWG 14)
Weight	58g
Module Size	12mm x 99mm x 70mm
Operating temperature	-40°C to 70°C (-40°F to 158°F)

1. Wiring Diagram

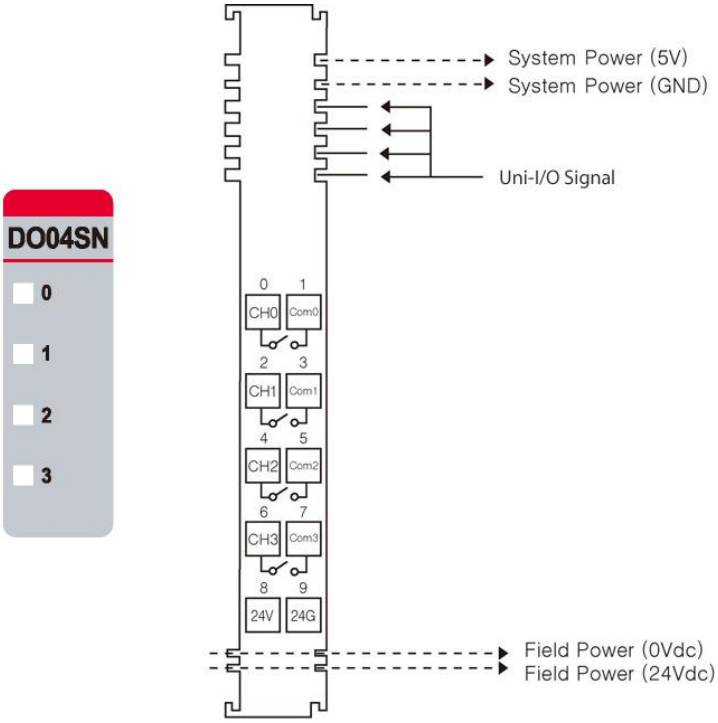

Pin No.	Signal Description	Pin No.	Signal Description
0	Output 0	1	COM 0
2	Output 1	3	COM 1
4	Output 2	5	COM 2
6	Output 3	7	COM 3
8	Field Power 24V	9	Field Power 0V

2. LED Indicators

LED No.	LED Function / Description	LED Color
0	Output 0	Green
1	Output 1	Green
2	Output 2	Green
3	Output 3	Green

Status	LED	Indication
No Signal	Off	No Output Signal
On Signal	Green	Normal Operation

URA-0400O (AI04O) - 4 Current Inputs 12bit

Items	Specification
Inputs per module	4 inputs single ended, non-isolated between inputs
Indicators(Logic side)	4 Green Input status
Resolution in Ranges	12 bits : 4.88uA/Bit(0~20mA), 3.91uA/Bit(4~20mA)
Input Range	0~20mA, 4~20mA
Data Format	16bits Integer (2' compliment)
Module Error	±0.1% Full Scale @ 25 ºC (77°F) ambient ±0.3% Full Scale @ -40 ºC, 70 ºC (-40°F to 158°F)
Input Impedance	121.5Ω
Diagnostic	Diagnostic Field Power Off : LED Blinking Field Power On : LED Off < 0.5% (Maximum Input Value) Field Power On : LED On > 0.5% (Maximum Input Value) Maximum Range Over : LED Off > 21mA Minimum Range Over : LED Off < 3mA (4 ~ 20mA)
Conversion Time	800usec / All input
Field calibration	Not Required
Common Type	4 Common, Field Power 0V is Common(AGND)
Power dissipation	Max. 25mA @ 5.0VDC
Isolation	I/O to Logic : Isolation Field power : Non-Isolation
Field Power	Supply Voltage : 24VDC nominal Voltage Range : 18 to 32VDC Power Dissipation : Max. 25mA@24VDC
Wiring	I/O Cable Max. 2.0mm^2 (AWG 14)
Weight	58g
Module Size	12mm x 99mm x 70mm
Operating temperature	-40°C to 70°C (-40°F to 158°F)

1. Wiring Diagram

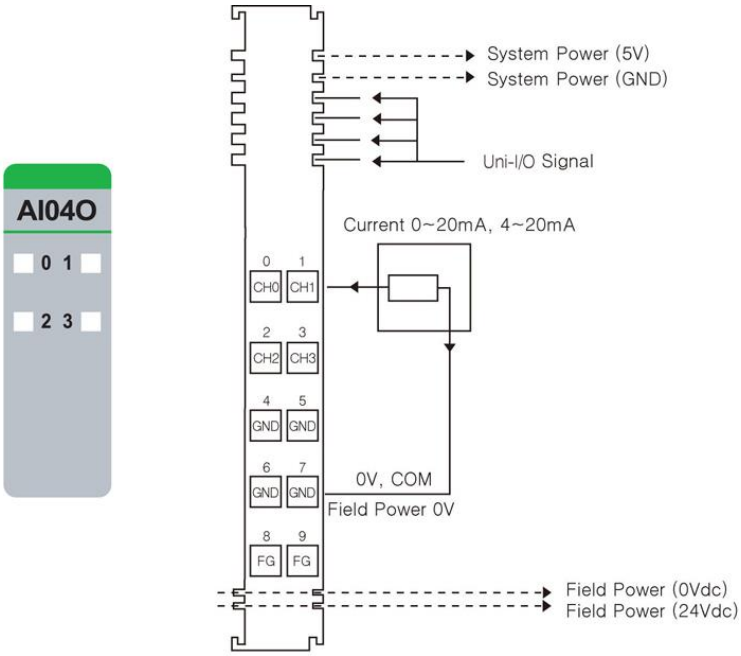

Pin No.	Signal Description	Pin No.	Signal Description
0	Input 0	1	Input 1
2	Input 2	3	Input 3
4	Input Common(AGND)	5	Input Common(AGND)
6	Input Common(AGND)	7	Input Common(AGND)
8	Field Ground	9	Field Ground

2. LED Indicators

LED No.	LED Function / Description	LED Color
0	Input 0	Green
1	Input 1	Green
2	Input 2	Green
3	Input 3	Green

Status	LED	Indication
Normal Operation	[LED Off < 0.5% (Maximum Input Value)] - Input OFF [LED On > 0.5% (Maximum Input Value)] - Input Green	Normal Operation
Overrun/Underrun	[LED Off > 21mA (Maximum Range Over] – Input OFF [LED Off < 3mA (Minimum Range Over , 4 ~ 20mA)] – Input OFF	Over range Check
Field Power Error	All Input Repeat the Green and OFF	Field Power is unconnected

URA-0800O (AI08O) - 8 Current Inputs 12bit

Items	Specification
Inputs per module	8 Inputs single ended, non-isolated between inputs
Indicators(Logic side)	8 Green Input status
Resolution in Ranges	12 bits : 4.88uA/Bit(0~20mA), 3.91uA/Bit(4~20mA)
Input Range	0~20mA, 4~20mA
Data Format	16bits Integer (2' compliment)
Module Error	±0.1% Full Scale @ 25 ºC (77°F) ambient ±0.3% Full Scale @ -40 ºC, 70 ºC (-40°F, 158°F)
Input Impedance	121.5Ω
Diagnostic	Diagnostic Field Power Off : LED Blinking Field Power On : LED Off < 0.5% (Maximum Input Value) Field Power On : LED On > 0.5% (Maximum Input Value) Maximum Range Over : LED Off > 21mA Minimum Range Over : LED Off < 3mA (4 ~ 20mA)
Conversion Time	≤ 1msec / All channel (≤ 0.125ms per channel)
Field calibration	Not Required
Common Type	2 Common, Field Power 0V is Common(AGND)
Power dissipation	Max. 30mA @ 5.0VDC
Isolation	I/O to Logic : Isolation Field power : Non-Isolation
Field Power	Supply Voltage : 24VDC nominal Voltage Range : 18 to 32VDC Power Dissipation : Max. 30mA@24VDC
Wiring	I/O Cable Max. 2.0mm^2 (AWG 14)
Weight	58g
Module Size	12mm x 99mm x 70mm
Operating temperature	-40°C to 70°C (-40°F to 158°F)

1. Wiring Diagram

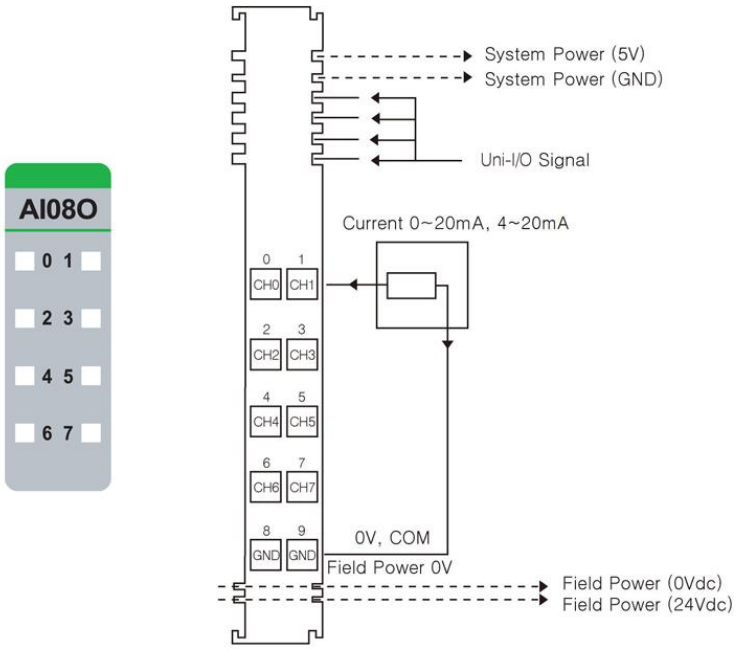

Pin No.	Signal Description	Pin No.	Signal Description
0	Input 0	1	Input 1
2	Input 2	3	Input 3
4	Input 4	5	Input 5
6	Input 6	7	Input 7
8	Input Common(AGND)	9	Input Common(AGND)

2. LED Indicators

LED No.	LED Function / Description	LED Color
0	Input 0	Green
1	Input 1	Green
2	Input 2	Green
3	Input 3	Green
4	Input 4	Green
5	Input 5	Green
6	Input 6	Green
7	Input 7	Green

Status	LED	Indication
Normal Operation	[LED Off < 0.5% (Maximum Input Value)] - Input OFF [LED On > 0.5% (Maximum Input Value)] - Input Green	Normal Operation
Overrun/Underrun	[LED Off > 21mA (Maximum Range Over] – Input OFF [LED Off < 3mA (Minimum Range Over , 4 ~ 20mA)] – Input OFF	Over range Check
Field Power Error	All Input Repeat the Green and OFF	Field Power is unconnected

URA-1600O-8 (AI16O8) - 16 Analog Current Inputs 12bit

Items	Specification
Inputs per module	16 Channels single ended, non-isolated between channels
Indicators(Logic side)	1 Green status LED
Resolution in Ranges	12 bits : 4.88uA/Bit(0~20mA), 3.91uA/Bit(4~20mA)
Input Range	0~20mA, 4~20mA
Data Format	16bits Integer (2' compliment)
Module Error	±0.1% Full Scale @ 25 ºC (77°F) ambient ±0.3% Full Scale @ -40 ºC, 60 ºC (-40°F , 140°F)
Input Impedance	121.5Ω
Conversion Time	Max. 3.2msec (All channel)
Field calibration	Not Required
Common Type	2 Common, Field Power 0V is Common(AGND)
Power dissipation	Max. 200mA @ 5.0VDC
Isolation	I/O to Logic : Photocoupler Isolation Field power : Not Connected
Field Power	Not used Field power bypass to next expansion module
Wiring	I/O Cable Max. 1.0mm^2 (AWG 18)
Weight	63g
Module Size	12mm x 109mm x 70mm
Operating temperature	-40°C to 60°C (-40°F to 140°F)

1. Wiring Diagram

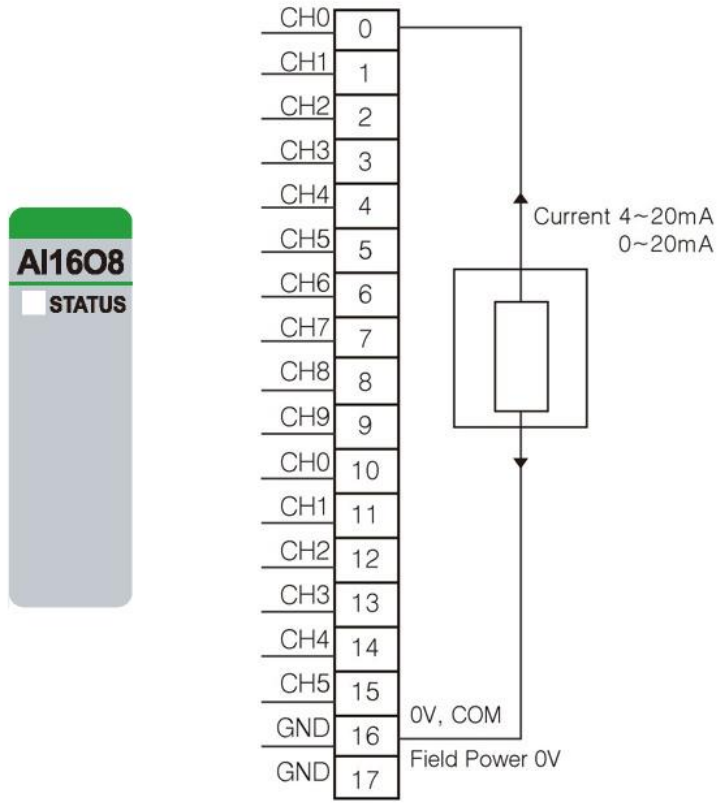

Pin No.	Signal Description
0	Input 0
1	Input 1
2	Input 2
3	Input 3
4	Input 4
5	Input 5
6	Input 6
7	Input 7
8	Input 8
9	Input 9
10	Input 10
11	Input 11
12	Input 12
13	Input 13
14	Input 14
15	Input 15
16	Input Common(AGND)
17	Input Common(AGND)

2. LED Indicators

LED No.	LED Function / Description	LED Color
0	Input 0	Green

Status	LED	Indication
Uni-I/O Status	Off	Disconnection
	Green	Connection

URA-0400P (AI04P) - 4 Analog Voltage Inputs 12bit

Items	Specification
Inputs per module	4 Inputs single ended, non-isolated between inputs
Indicators(Logic side)	4 Green Input status
Resolution in Ranges	12 bits : 2.44mV/Bit(0~10V) , 1.22mV/Bit(0~5V), 0.977mV/Bit(1~5V)
Input Current Range	0~10VDC, 0~5VDC, 1~5VDC
Data Format	16bits Integer (2's complement)
Module Error	±0.1% Full Scale @ 25 ºC (77°F) ambient ±0.3% Full Scale @ -40°C, 70°C (-40°F , 158°F)
Input Impedance	500kΩ
Diagnostic	Diagnostic Field Power Off : LED Blinking Field Power On : LED Off < 0.5% (Maximum Input Value) Field Power On : LED On > 0.5% (Maximum Input Value)
Conversion Time	≤350usec / All input
Calibration	Not Required
Common Type	4 Common, Field Power 0V is Common(AGND)
Power dissipation	Max. 25mA @ 5.0VDC
Isolation	I/O to Logic : Isolation Field power : Non-Isolation
Field Power	Supply Voltage : 24VDC nominal Voltage Range : 18 to 32VDC Power Dissipation : Max. 25mA@24VDC
Wiring	I/O Cable Max. 2.0mm^2 (AWG 14)
Weight	58g
Module Size	12mm x 99mm x 70mm
Operating temperature	-40°C to 70°C (-40°F to 158°F)

1. Wiring Diagram

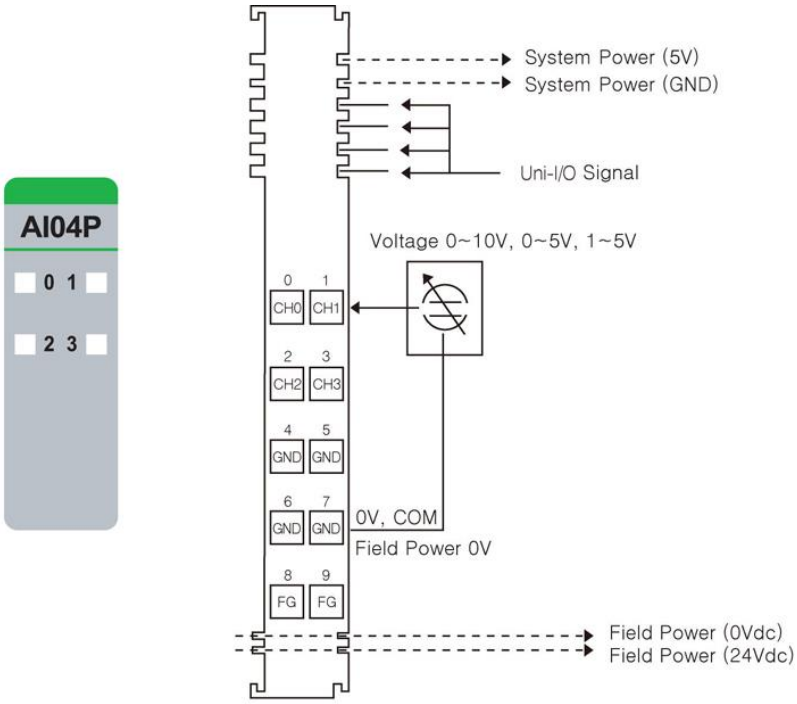

Pin No.	Signal Description	Pin No.	Signal Description
0	Input 0	1	Input 1
2	Input 2	3	Input 3
4	Input Common(AGND)	5	Input Common(AGND)
6	Input Common(AGND)	7	Input Common(AGND)
8	Field Ground	9	Field Ground

2. LED Indicators

LED No.	LED Function / Description	LED Color
0	Input 0	Green
1	Input 1	Green
2	Input 2	Green
3	Input 3	Green

Status	LED	Indication
Normal Operation	[LED Off < 0.5% (Maximum Input Value)] - Input OFF [LED On > 0.5% (Maximum Input Value)] - Input Green	Normal Operation
Field Power Error	All Input Repeat the Green and OFF	Field Power is unconnected

URA-0800P (AI08P) - 8 Analog Voltage Inputs 12bit

Items	Specification
Inputs per module	8 Inputs single ended, non-isolated between inputs
Indicators(Logic side)	8 Green Input status
Resolution in Ranges	12 bits : 2.44mV/Bit(0~10V) , 1.22mV/Bit(0~5V)
Input Current Range	0~10VDC, 0~5 VDC, 1~5 VDC
Data Format	16bits Integer (2's complement)
Module Error	±0.1% Full Scale @ 25 ºC (77°F) ambient ±0.3% Full Scale @ -40°C, 70°C (-40°F to 158°F)
Input Impedance	500kΩ
Diagnostic	Diagnostic Field Power Off : LED Blinking Field Power On : LED Off < 0.5% (Maximum Input Value) Field Power On : LED On > 0.5% (Maximum Input Value)
Conversion Time	≤1msec / All Input (≤ 0.125ms per input)
Calibration	Not Required
Common Type	2 Common, Field Power 0V is Common(AGND)
Power dissipation	Max. 30mA @ 5.0VDC
Isolation	I/O to Logic : Isolation Field power : Non-Isolation
Field Power	Supply Voltage : 24VDC nominal Voltage Range : 18 to 32VDC Power Dissipation : Max. 30mA@24VDC
Wiring	I/O Cable Max. 2.0mm^2 (AWG 14)
Weight	58g
Module Size	12mm x 99mm x 70mm
Operating temperature	-40°C to 70°C (-40°F to 158°F)

1. Wiring Diagram

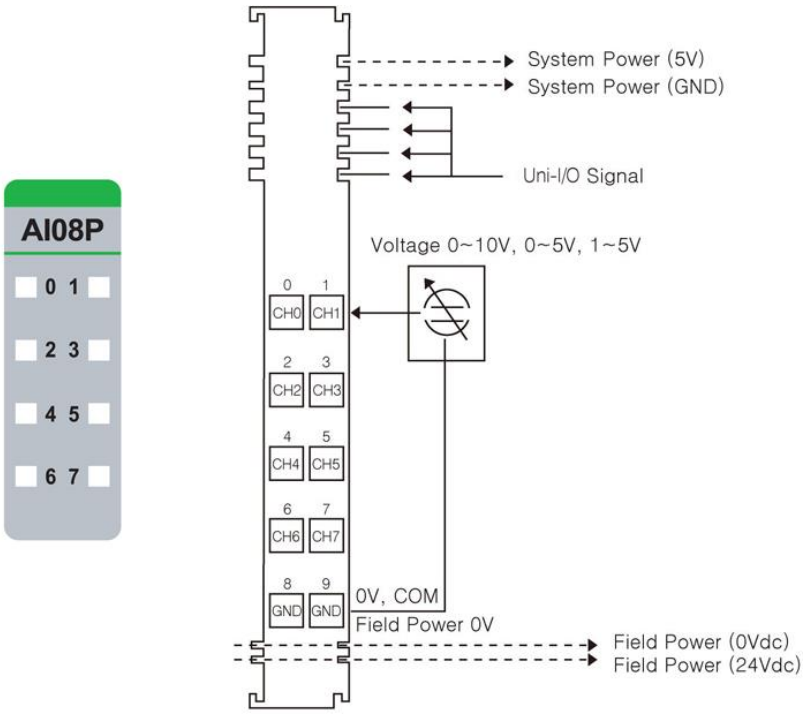

Pin No.	Signal Description	Pin No.	Signal Description
0	Input 0	1	Input 1
2	Input 2	3	Input 3
4	Input 4	5	Input 5
6	Input 6	7	Input 7
8	Input Common(AGND)	9	Input Common(AGND)

2. LED Indicators

LED No.	LED Function / Description	LED Color
0	Input 0	Green
1	Input 1	Green
2	Input 2	Green
3	Input 3	Green
4	Input 4	Green
5	Input 5	Green
6	Input 6	Green
7	Input 7	Green

Status	LED	Indication
Normal Operation	[LED Off < 0.5% (Maximum Input Value)] - Input OFF [LED On > 0.5% (Maximum Input Value)] - Input Green	Normal Operation
Field Power Error	All Input Repeat the Green and OFF	Field Power is unconnected

URA-1600P-8 (AI16P8) - 16 Analog Voltage Inputs 12bit

Items	Specification
Inputs per module	16 Channels single ended, non-isolated between channels
Indicators(Logic side)	1 Green status LED
Resolution in Ranges	12 bits : 2.44mV/Bit(0~10V) , 1.22mV/Bit(0~5V), 0.98mV/Bit(1~5V)
Input Current Range	0~10VDC, 0~5VDC, 1~5VDC
Data Format	16bits Integer (2's complement)
Module Error	±0.1% Full Scale @ 25°C (77°F) ambient ±0.3% Full Scale @ -40°C, 60°C (-40°F to 140°F)
Input Impedance	500kΩ
Conversion Time	All Channel<1.3ms
Calibration	Not Required
Common Type	2 Common, Field Power 0V is Common(AGND)
Power dissipation	Max. 210mA @ 5.0Vdc
Isolation	I/O to Logic : Photocoupler Isolation Field power : Not Connected
Field Power	Not used Field power bypass to next expansion module
Wiring	I/O Cable Max. 1.0mm^2 (AWG 18)
Weight	63g
Module Size	12mm x 109mm x 70mm
Operating temperature	-40°C to 60°C (-40°F to 140°F)

1. Wiring Diagram

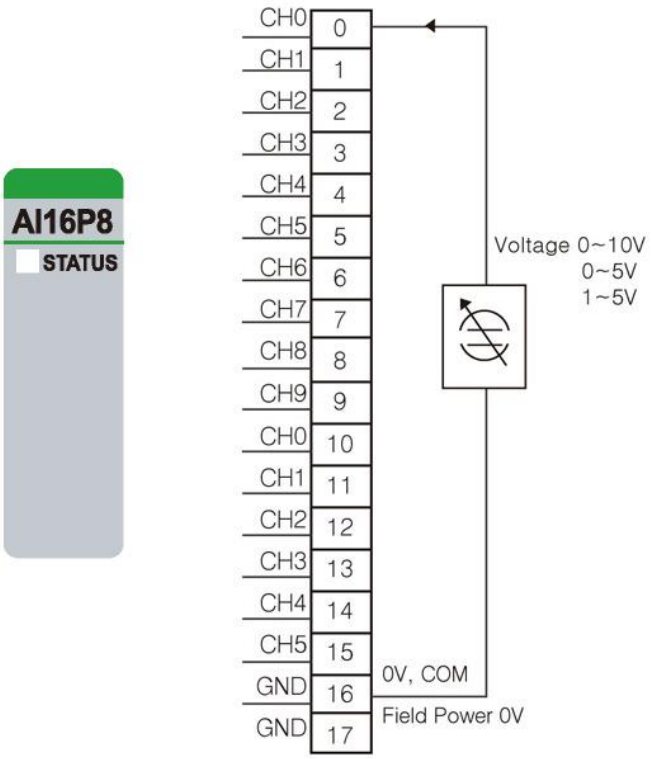

Pin No.	Signal Description
0	Input 0
1	Input 1
2	Input 2
3	Input 3
4	Input 4
5	Input 5
6	Input 6
7	Input 7
8	Input 8
9	Input 9
10	Input 10
11	Input 11
12	Input 12
13	Input 13
14	Input 14
15	Input 15
16	Input Common(AGND)
17	Input Common(AGND)

2. LED Indicators

LED No.	LED Function / Description	LED Color
0	Input 0	Green

Status	LED	Indication
Uni-I/O Status	Off	Disconnection
	Green	Connection

URA-0400T (AI04T) - 4 Analog Current Inputs 16bit

Items	Specification
Inputs per module	4 Input s single ended, non-isolated between Inputs
Indicators(Logic side)	4 Green Input status
Resolution in Ranges	16 bit (Include Sign) 15 bits : 0.61uA/Bit(0~20mA), 0.49uA/Bit(4~20mA)
Input Range	0~20mA, 4~20mA
Data Format	16bits Integer (2' compliment)
Module Error	±0.1% Full Scale @ 25°C (77°F) ambient ±0.3% Full Scale @ -40°C to 70°C (-40°F to 158°F)
Input Impedance	121.5Ω
Diagnostic	Diagnostic Field Power Off : LED Blinking Field Power On : LED Off < 0.5% (Maximum Input Value) Field Power On : LED On > 0.5% (Maximum Input Value) Minimum Range Over : LED Off < 3mA (4 ~ 20mA)
Conversion Time	650usec / All Input
Field calibration	Not Required
Common Type	4 Common, Field Power 0V is Common(AGND)
Power dissipation	Max. 25mA @ 5.0VDC
Isolation	I/O to Logic : Isolation Field power : Non-Isolation
Field Power	Supply Voltage : 24VDC nominal Voltage Range : 18 to 32Vdc Power Dissipation : Max. 20mA@24VDC
Wiring	I/O Cable Max. 2.0mm^2 (AWG 14)
Weight	58g
Module Size	12mm x 99mm x 70mm
Operating temperature	-40°C to 70°C (-40°F to 158°F)

1. Wiring Diagram

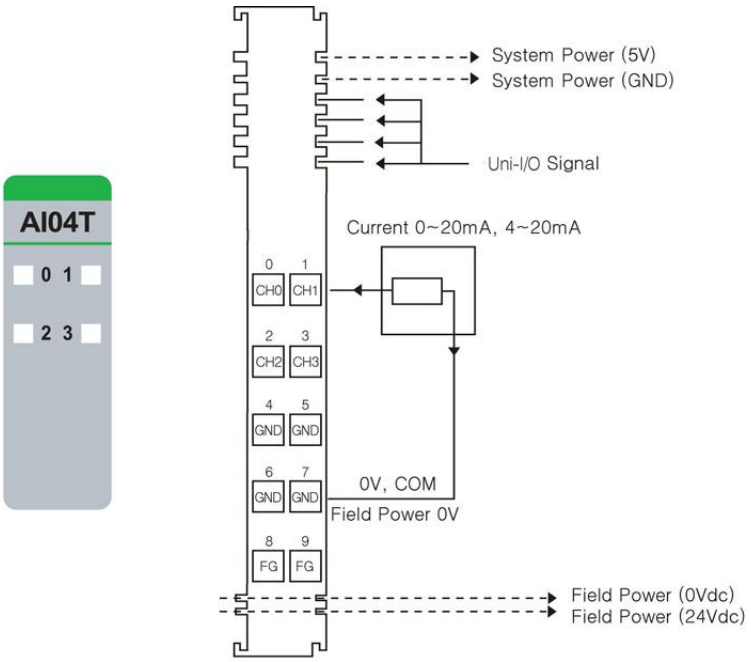

Pin No.	Signal Description	Pin No.	Signal Description
0	Input 0	1	Input 1
2	Input 2	3	Input 3
4	Input Common(AGND)	5	Input Common(AGND)
6	Input Common(AGND)	7	Input Common(AGND)
8	Field Ground	9	Field Ground

2. LED Indicators

LED No.	LED Function / Description	LED Color
0	Input 0	Green
1	Input 1	Green
2	Input 2	Green
3	Input 3	Green

Status	LED	Indication
Normal Operation	[LED Off < 0.5% (Maximum Input Value)] - Input OFF [LED On > 0.5% (Maximum Input Value)] - Input Green	Normal Operation
Overrun/Underrun	[LED Off < 3mA (Minimum Range Over , 4 ~ 20mA)] – Input OFF	Over range Check
Field Power Error	All Input Repeat the Green and OFF	Field Power is unconnected

URA-0800T (AI08T) - 8 Analog Current Inputs 16bit

Items	Specification
Inputs per module	8 Input s single ended, non-isolated between Inputs
Indicators(Logic side)	8 Green Input status
Resolution in Ranges	16 bit (Include Sign) 15 bits : 0.61uA/Bit(0~20mA), 0.49uA/Bit(4~20mA)
Input Range	0~20mA, 4~20mA
Data Format	16bits Integer (2' compliment)
Module Error	±0.1% Full Scale @ 25°C (77°F) ambient ±0.3% Full Scale @ -40°C to 70°C (-40°F to 158°F)
Input Impedance	121.5Ω
Diagnostic	Diagnostic Field Power Off : LED Blinking Field Power On : LED Off < 0.5% (Maximum Input Value) Field Power On : LED On > 0.5% (Maximum Input Value) Minimum Range Over : LED Off < 3mA (4 ~ 20mA)
Conversion Time	≤ 1msec / All channel (≤ 0.125ms per channel)
Field calibration	Not Required
Common Type	2 Common, Field Power 0V is Common(AGND)
Power dissipation	Max. 30mA @ 5.0VDC
Isolation	I/O to Logic : Isolation Field power : Non-Isolation
Field Power	Supply Voltage : 24VDC nominal Voltage Range : 18 to 32Vdc Power Dissipation : Max. 30mA@24VDC
Wiring	I/O Cable Max. 2.0mm^2 (AWG 14)
Weight	58g
Module Size	12mm x 99mm x 70mm
Operating temperature	-40°C to 70°C (-40°F to 158°F)

1. Wiring Diagram

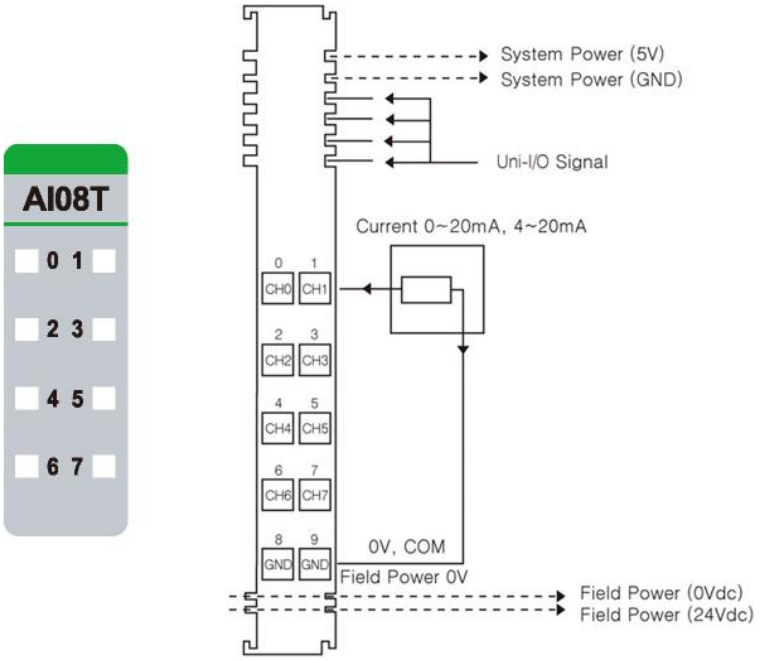

Pin No.	Signal Description	Pin No.	Signal Description
0	Input 0	1	Input 1
2	Input 2	3	Input 3
4	Input 4	5	Input 5
6	Input 6	7	Input 7
8	Input Common(AGND)	9	Input Common(AGND)

2. LED Indicators

LED No.	LED Function / Description	LED Color
0	Input 0	Green
1	Input 1	Green
2	Input 2	Green
3	Input 3	Green
4	Input 4	Green
5	Input 5	Green
6	Input 6	Green
7	Input 7	Green

Status	LED	Indication
Normal Operation	[LED Off < 0.5% (Maximum Input Value)] - Input OFF [LED On > 0.5% (Maximum Input Value)] - Input Green	Normal Operation
Overrun/Underrun	[LED Off > 21mA (Maximum Range Over] – Input OFF [LED Off < 3mA (Minimum Range Over , 4 ~ 20mA)] – Input OFF	Over range Check
Field Power Error	All Input Repeat the Green and OFF	Field Power is unconnected

URA-1600T-8 (AI16U8) - 16 Analog Current Inputs 16bit

Items	Specification
Inputs per module	16 Channels single ended, non-isolated between channels
Indicators(Logic side)	1 Green Uni-I/O status LED
Resolution in Ranges	16 bit (Include Sign) 15 bits : 0.31mV/bit(0~10V) , 0.15mV/bit(0~5V), 0.12mV/bit(1~5VDC)
Input Range	0~10Vdc, 0~5Vdc, 1~5Vdc
Data Format	16bits Integer (2's complement)
Module Error	±0.1% Full Scale @ 25°C (77°F) ambient ±0.3% Full Scale @ -40°C, 60°C (-40°F to 140°F)
Input Impedance	500kΩ
Conversion Time	All Channel<1.3ms
Field calibration	Not Required
Common Type	2 Common, Field Power 0V is Common(AGND)
Power dissipation	Max. 210mA @ 5.0VDC
Isolation	I/O to Logic : Photocoupler Isolation Field power : Not Connected
Field Power	Not used Field power bypass to next expansion module
Wiring	I/O Cable Max. 0.75mm^2 (AWG 18)
Weight	63g
Module Size	12mm x 109mm x 70mm
Operating temperature	-40°C to 60°C (-40°F to 140°F)

1. Wiring Diagram

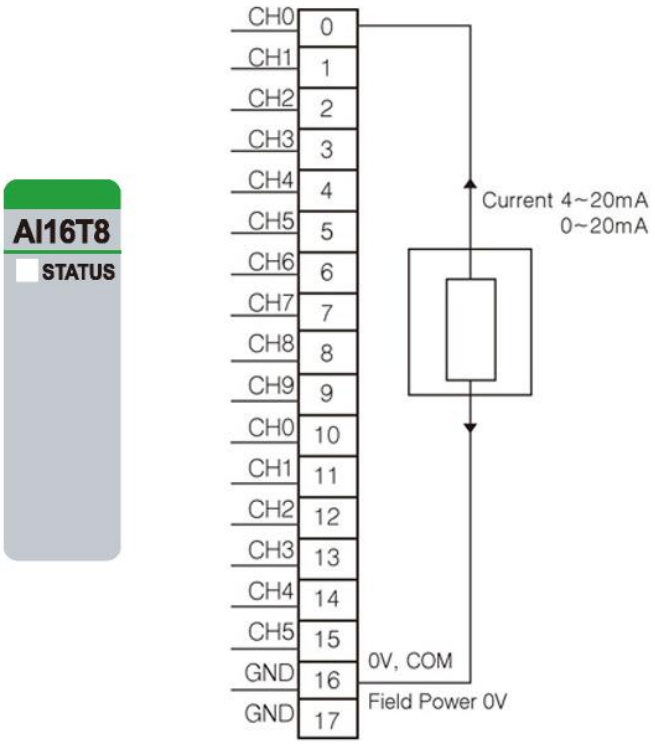

Pin No.	Signal Description
0	Input 0
1	Input 1
2	Input 2
3	Input 3
4	Input 4
5	Input 5
6	Input 6
7	Input 7
8	Input 8
9	Input 9
10	Input 10
11	Input 11
12	Input 12
13	Input 13
14	Input 14
15	Input 15
16	Input Common(AGND)
17	Input Common(AGND)

2. LED Indicators

LED No.	LED Function / Description	LED Color
0	Input 0	Green

Status	LED	Indication
Uni-I/O Status	Off	Disconnection
	Green	Connection

URA-0400U (AI04U) - 4 Analog Voltage Inputs 16bit

Items	Specification
Inputs per module	4 Inputs single ended, non-isolated between Inputs
Indicators(Logic side)	4 Green Input status
Resolution in Ranges	16 bit (Include Sign) 15 bits : 0.31mV/bit(0~10V) , 0.15mV/bit(0~5V), 0.12mV/bit(1~5Vdc)
Input Current Range	0~10VDC, 0~5VDC, 1~5VDC
Data Format	16bits Integer (2's complement)
Module Error	±0.1% Full Scale @ 25°C (77°F) ambient ±0.3% Full Scale @ -40°C to 70°C (-40°F to 158°F)
Input Impedance	500kΩ
Diagnostic	Diagnostic Field Power Off : LED Blinking Field Power On : LED Off < 0.5% (Maximum Input Value) Field Power On : LED On > 0.5% (Maximum Input Value)
Conversion Time	≥350usec / All Input
Calibration	Not Required
Common Type	4 Common, Field Power 0V is Common(AGND)
Power dissipation	Max. 25mA @ 5.0VDC
Isolation	I/O to Logic : Isolation Field power : Non-Isolation
Field Power	Supply Voltage : 24VDC nominal Voltage Range : 18 to 32VDC Power Dissipation : Max. 25mA@24VDC
Wiring	I/O Cable Max. 2.0mm^2 (AWG 14)
Weight	58g
Module Size	12mm x 99mm x 70mm
Operating temperature	-40°C to 70°C (-40°F to 158°F)

1. Wiring Diagram

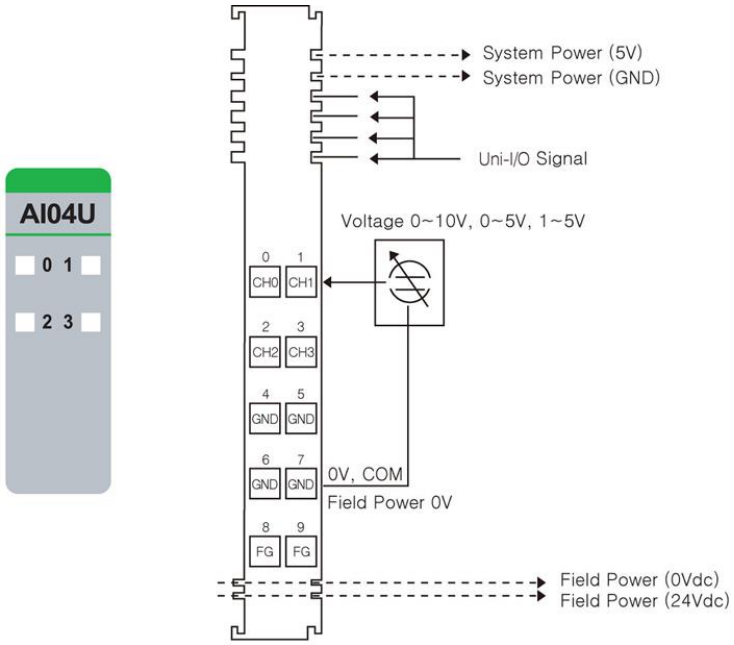

Pin No.	Signal Description	Pin No.	Signal Description
0	Input 0	1	Input 1
2	Input 2	3	Input 3
4	Input Common(AGND)	5	Input Common(AGND)
6	Input Common(AGND)	7	Input Common(AGND)
8	Field Ground	9	Field Ground

2. LED Indicators

LED No.	LED Function / Description	LED Color
0	Input 0	Green
1	Input 1	Green
2	Input 2	Green
3	Input 3	Green

Status	LED	Indication
Normal Operation	[LED Off < 0.5% (Maximum Input Value)] - Input OFF [LED On > 0.5% (Maximum Input Value)] - Input Green	Normal Operation
Field Power Error	All Channel Repeat the Green and OFF	Field Power is unconnected

URA-0800U (AI08U) - 8 Analog Voltage Inputs 16bit

Items	Specification
Inputs per module	8 Channels single ended, non-isolated between channels
Indicators(Logic side)	1 Green Uni-I/O status LED
Resolution in Ranges	16 bit (Include Sign) 15 bits : 0.31mV/bit(0~10V) , 0.15mV/bit(0~5V), 0.12mV/bit(1~5Vdc)
Input Current Range	0~10Vdc, 0~5VDC, 1~5VDC
Data Format	16bits Integer (2's complement)
Module Error	±0.1% Full Scale @ 25°C (77°F) ambient ±0.3% Full Scale @ -40°C, 70°C (-40°F to 158°F)
Input Impedance	500kΩ
Diagnostic	Diagnostic Field Power Off : LED Blinking Field Power On : LED Off < 0.5% (Maximum Input Value) Field Power On : LED On > 0.5% (Maximum Input Value) Maximum Range Over : LED Off > 21mA Minimum Range Over : LED Off < 3mA (4 ~ 20mA)
Conversion Time	≤1msec / All channel (≤ 0.125ms per channel)
Calibration	Not Required
Common Type	2 Common, Field Power 0V is Common(AGND)
Power dissipation	Max. 30mA @ 5.0VDC
Isolation	I/O to Logic : Photocoupler Isolation Field power : Not Connected
Field Power	Supply Voltage : 24VDC nominal Voltage Range : 18 to 32VDC Power Dissipation : Max. 30mA@24VDC
Wiring	I/O Cable Max. 2.0mm^2 (AWG 14)
Weight	58g
Module Size	12mm x 99mm x 70mm
Operating temperature	-40°C to 70°C (-40°F to 158°F)

1. Wiring Diagram

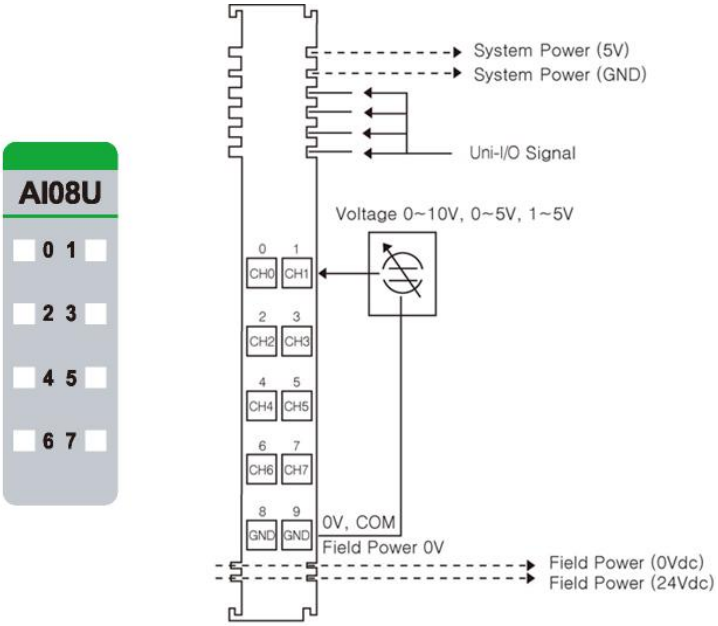

Pin No.	Signal Description	Pin No.	Signal Description
0	Input 0	1	Input 1
2	Input 2	3	Input 3
4	Input 4	5	Input 5
6	Input 6	7	Input 7
8	Input Common(AGND)	9	Input Common(AGND)

2. LED Indicators

LED No.	LED Function / Description	LED Color
0	Input 0	Green
1	Input 1	Green
2	Input 2	Green
3	Input 3	Green
4	Input 4	Green
5	Input 5	Green
6	Input 6	Green
7	Input 7	Green

Status	LED	Indication
Normal Operation	[LED Off < 0.5% (Maximum Input Value)] - Input OFF [LED On > 0.5% (Maximum Input Value)] - Input Green	Normal Operation
Field Power Error	All Input Repeat the Green and OFF	Field Power is unconnected

URA-1600U-8 (AI16U8) - 16 Analog Voltage Inputs 16bit

Items	Specification
Inputs per module	16 Channels single ended, non-isolated between channels
Indicators(Logic side)	1 Green Uni-I/O status LED
Resolution in Ranges	16 bit (Include Sign) 15 bits : 0.31mV/bit(0~10V) , 0.15mV/bit(0~5V), 0.12mV/bit(1~5Vdc)
Input Current Range	0~10Vdc, 0~5VDC, 1~5VDC
Data Format	16bits Integer (2's complement)
Module Error	±0.1% Full Scale @ 25°C (77°F) ambient ±0.3% Full Scale @ -40°C, 60°C (-40°F to 140°F)
Input Impedance	500kΩ
Conversion Time	All Channel<1.3ms
Calibration	Not Required
Common Type	2 Common, Field Power 0V is Common(AGND)
Power dissipation	Max. 210mA @ 5.0VDC
Isolation	I/O to Logic : Photocoupler Isolation Field power : Not Connected
Field Power	Not used Field power bypass to next expansion module
Wiring	I/O Cable Max. 0.75mm^2 (AWG 18)
Weight	63g
Module Size	12mm x 109mm x 70mm
Operating temperature	-40°C to 60°C (-40°F to 140°F)

1. Wiring Diagram

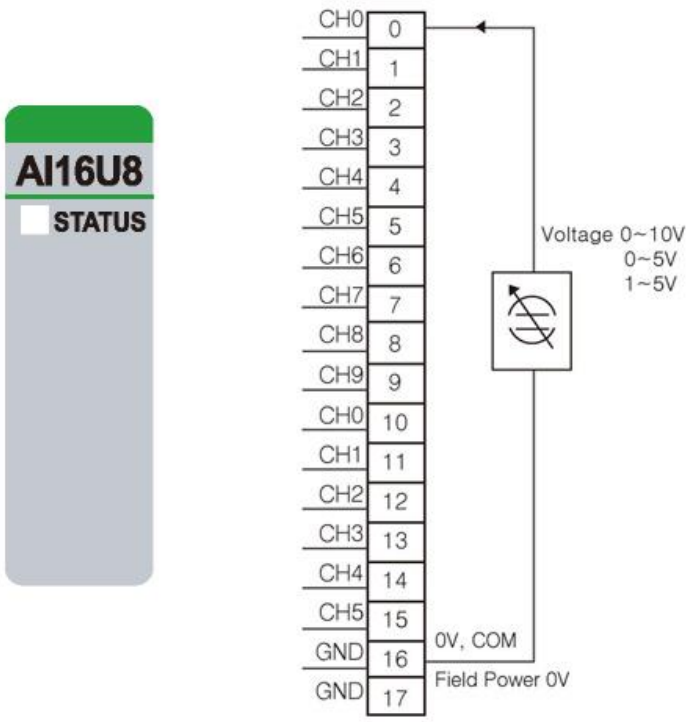

Pin No.	Signal Description
0	Input 0
1	Input 1
2	Input 2
3	Input 3
4	Input 4
5	Input 5
6	Input 6
7	Input 7
8	Input 8
9	Input 9
10	Input 10
11	Input 11
12	Input 12
13	Input 13
14	Input 14
15	Input 15
16	Input Common(AGND)
17	Input Common(AGND)

2. LED Indicators

LED No.	LED Function / Description	LED Color
0	Input 0	Green

Status	LED	Indication
Uni-I/O Status	Off	Disconnection
	Green	Connection

URA-0004W (AO04W) - 4 Analog Current Outputs 12bit

Items	Specification
Outputs per module	4 Outputs single ended
Indicators(Logic side)	4 Green Output Status LEDs
Resolution in Ranges	12 bits : 4.88uA/bit
Output Range	0~20mA
Data Format	16bits Integer (2's complement)
Module Error	±0.1% Full Scale @ 25°C (77°F) ambient ±0.3% Full Scale @ -40°C to 70°C (-40°F to 158°F)
Load Resistance	Max. 250Ω *
Dignostic	Field Power Off : LED Blinking Field Power On : No Output LED Off Field Power On : Output LED ON
Conversion Time	Max. 150usec / All Output
Calibration	Not Required
Common Type	4 Channels / 4 Common
Power Dissipation	Max. 30mA @ 5VDC
Isolation	I/O to Logic : Photocoupler Isolation Field power : Non-Isolation
Field Power	Supply Voltage : 24VDCnominal Voltage Range : 18 to 32VDC Power Dissipation : Max. 80mA @ 24VDC
Wiring	I/O Cable Max. 2.0mm^2 (AWG 14)
Weight	58g
Module Size	12mm x 99mm x 70mm

* Operating temperature

-40°C to 70°C (-40°F to 158°F) temperature range specification can be guaranteed under the following conditions.

Load Resistance : Min 100Ω, Max 250Ω

Otherwise, temperature specification can be guranteed with -40°C to 60°C (-40°F to 140°F)

1. Wiring Diagram

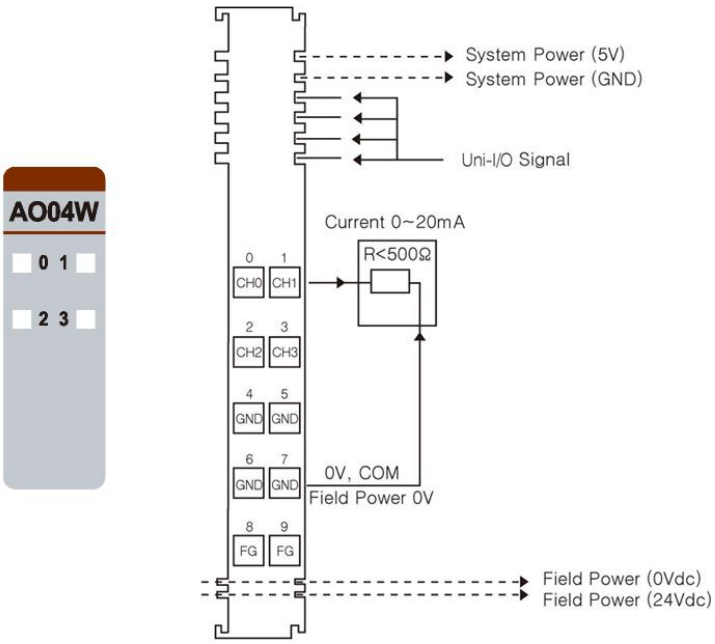

Pin No.	Signal Description	Pin No.	Signal Description
0	Analog Output 0	1	Analog Output 1
2	Analog Output 2	3	Analog Output 3
4	Output Common(AGND)	5	Output Common(AGND)
6	Output Common(AGND)	7	Output Common(AGND)
8	Field Ground	9	Field Ground

2. LED Indicators

LED No.	LED Function / Description	LED Color
0	Output 0	Green
1	Output 1	Green
2	Output 2	Green
3	Output 3	Green

Status	LED	Indication
Normal Operation	Off	No Output Value
	Green	Normal Operation
Field Power Error	All Channel Repeat Green and Off	Field Power is unconnected.

URA-0008W (AO08W) - 8 Analog Current Outputs 12bit

Items	Specification
Outputs per module	8 Outputs single ended
Indicators(Logic side)	8 Green Output status
Resolution in Ranges	12 bits : 4.88uA/Bit
Output Range	0~20mA
Data Format	16bits Integer (2' compliment)
Module Error	±0.1% Full Scale @ 25°C (77°F) ambient ±0.3% Full Scale @ -40°C, 60°C (-40°F to 140°F)
Load Resistance	Min 100Ω, Max. 250Ω
Dignostic	Field Power Off : LED Blinking Field Power On : No Output LED Off Field Power On : Output LED ON
Conversion Time	Max. 250usec / All Output
Calibration	Not Required
Common Type	2 Common, Field Power 0V is Common(AGND)
Power dissipation	Max. 30mA @ 5.0VDC
Isolation	I/O to Logic : Photocoupler isolation Field power : Non-Isolation
Field Power	Supply Voltage : 24VDC nominal Voltage Range : 18 to 32VDC Power Dissipation : Max. 130mA @ 24VDC
Wiring	I/O Cable Max. 2.0mm^2 (AWG 14)
Weight	58g
Module Size	12mm x 99mm x 70mm
Operating temperature	-40°C to 70°C (-40°F to 158°F)

1. Wiring Diagram

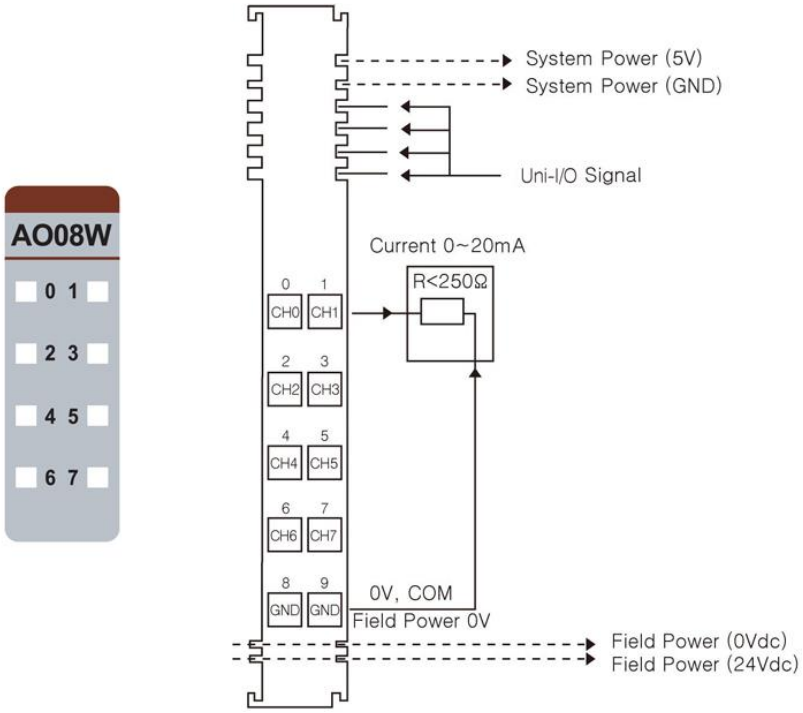

Pin No.	Signal Description	Pin No.	Signal Description
0	Analog Output 0	1	Analog Output 1
2	Analog Output 2	3	Analog Output 3
4	Analog Output 4	5	Analog Output 5
6	Analog Output 6	7	Analog Output 7
8	Output Common(AGND)	9	Output Common(AGND)

2. LED Indicators

LED No.	LED Function / Description	LED Color
0	Output 0	Green
1	Output 1	Green
2	Output 2	Green
3	Output 3	Green
4	Output 4	Green
5	Output 5	Green
6	Output 6	Green
7	Output 7	Green

tatus	LED	Indication
Normal Operation	No Output Channel Off Output Channel Green	No Output Output
Field Power Error	All Channel Repeat the Green and Off	Field power is unconnected.

URA-0004X (AO04X) - 4 Analog Voltage Outputs 12bit

Items	Specification
Outputs per module	4 Outputs single ended
Indicators(Logic side)	4 Green Output status
Resolution in Ranges	12 bits : 2.44mV/Bit
Output Range	0 ~ 10Vdc
Data Format	16bits Integer (2' compliment)
Module Error	±0.1% Full Scale @ 25°C (77°F) ambient ±0.3% Full Scale @ -40°C to 70°C (-40°F to 158°F)
Load Resistance	Min. 2KΩ
Conversion Time	Max. 150usec / All Output
Diagnostic	Field Power Off: LED Blinking Field Power On: No Output LED Off Field Power On: Output LED On
Calibration	Not Required
Common Type	4 Common, Field Power 0V is Common(AGND)
Power dissipation	Max. 30mA @ 5.0VDC
Isolation	I/O to Logic : Isolation Field power : Non-Isolation
Field Power	Supply Voltage : 24Vdc nominal Voltage Range : 18 to 32VDC Power Dissipation : Max. 35mA @ 24VDC
Wiring	I/O Cable Max. 2.0mm^2 (AWG 14)
Weight	58g
Module Size	12mm x 99mm x 70mm
Operating temperature	-40°C to 70°C (-40°F to 158°F)

1. Wiring Diagram

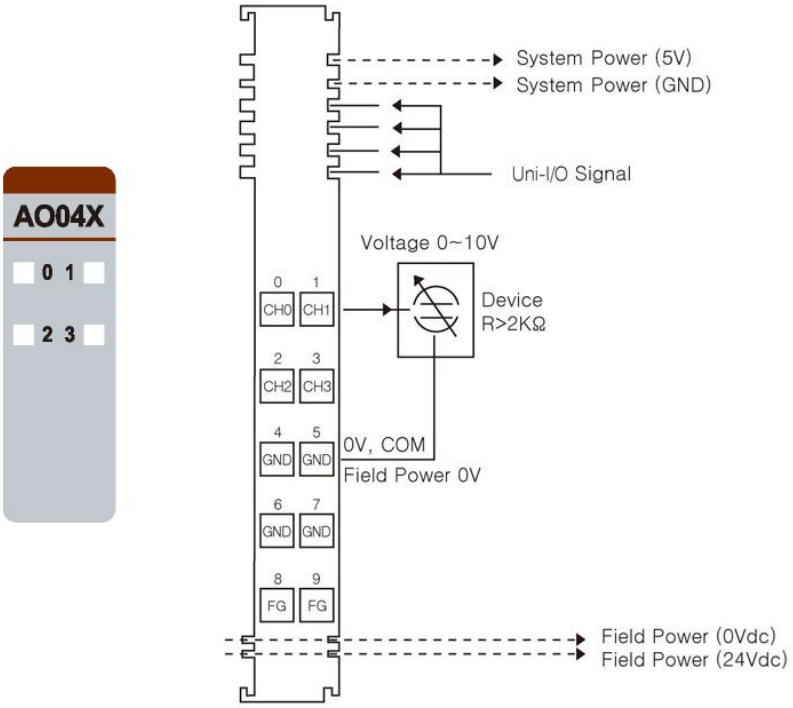

Pin No.	Signal Description	Pin No.	Signal Description
0	Analog Output 0	1	Analog Output 1
2	Analog Output 2	3	Analog Output 3
4	Output Common(AGND)	5	Output Common(AGND)
6	Output Common(AGND)	7	Output Common(AGND)
8	Field Ground	9	Field Ground

2. LED Indicators

LED No.	LED Function / Description	LED Color
0	Output 0	Green
1	Output 1	Green
2	Output 2	Green
3	Output 3	Green

Status	LED	Indication
Normal Operation	No Output Off Output Green	No Output Output
Field Power Error	All Channel Repeat the Green and Off	Field power is unconnected.

URA-0008X (AO08X) - 8 Analog Voltage Outputs 12bit

Items	Specification
Outputs per module	8 outputs single ended
Indicators(Logic side)	8 Green Output status
Resolution in Ranges	12 bits : 2.44mV/Bit
Output Range	0 ~ 10VDC
Data Format	16bits Integer (2' compliment)
Module Error	±0.1% Full Scale @ 25°C (77°F) ambient ±0.3% Full Scale @ 40°C to 70°C (-40°F to 158°F)
Load Resistance	Min. 2KΩ
Conversion Time	Max. 250usec / All Output
Diagnostic	Field Power Off: LED Blinking Field Power On: No Output LED Off Field Power On: Output LED On
Calibration	Not Required
Common Type	2 Common, Field Power 0V is Common(AGND)
Power dissipation	Max. 30mA @ 5.0VDC
Isolation	I/O to Logic : Isolation Field power : Non-Isolation
Field Power	Supply Voltage : 24VDC nominal Voltage Range : 18 to 32VDC Power Dissipation : Max. 70mA @ 24VDC
Wiring	I/O Cable Max. 2.0mm^2 (AWG 14)
Weight	58g
Module Size	12mm x 99mm x 70mm
Operating temperature	-40°C to 70°C (-40°F to 158°F)

1. Wiring Diagram

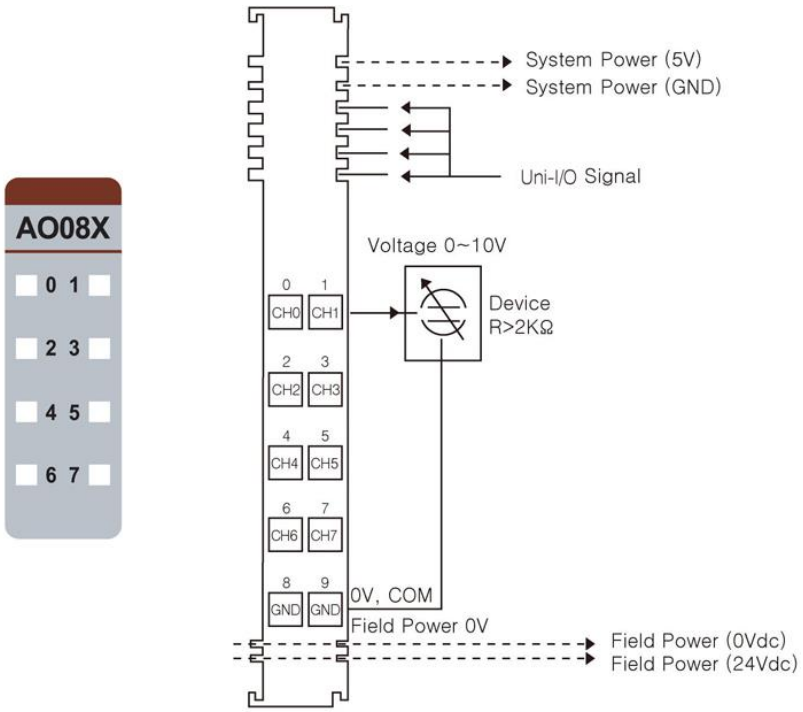

Pin No.	Signal Description	Pin No.	Signal Description
0	Analog Output 0	1	Analog Output 1
2	Analog Output 2	3	Analog Output 3
4	Analog Output 4	5	Analog Output 5
6	Analog Output 6	7	Analog Output 7
8	Output Common(AGND)	9	Output Common(AGND)

2. LED Indicators

LED No.	LED Function / Description	LED Color
0	Output 0	Green
1	Output 1	Green
2	Output 2	Green
3	Output 3	Green
4	Output 4	Green
5	Output 5	Green
6	Output 6	Green
7	Output 7	Green

Status	LED	Indication
Normal Operation	No Output Off Output Green	No Output Output
Field Power Error	All output Repeat the Green and Off	Field power is unconnected.

URA-0016X-8 (AO16X8) - 16 Analog Voltage Outputs_12bit

Items	Specification
Outputs per module	16 Channels single ended
Indicators(Logic side)	1 Green Uni-I/O status LED
Resolution in Ranges	12 bits : 2.44mV/Bit
Output Range	0 ~ 10VDC
Data Format	16bits Integer (2' compliment)
Module Error	±0.1% Full Scale @ 25°C (77°F) ambient ±0.3% Full Scale @ -40°C, 60°C (-40°F to 140°F)
Load Resistance	Min. 2KΩ
Conversion Time	Max. 450usec (All channel)
Diagnostic	Field Power Off : LED Blinking
Calibration	Not Required
Common Type	2 Common, Field Power 0V is Common(AGND)
Power dissipation	Max. 30mA @ 5.0VDC
Isolation	I/O to Logic : Isolation Field power : Non-Isolation
Field Power	Supply Voltage : 24VDC nominal Voltage Range : 18 to 32VDC Power Dissipation : Max. 150mA @ 24VDC, Load(2K)
Wiring	I/O Cable Max. 2.0mm^2 (AWG 14)
Weight	63g
Module Size	12mm x 109mm x 70mm
Operating temperature	-40°C to 60°C (-40°F to 140°F)

1. Wiring Diagram

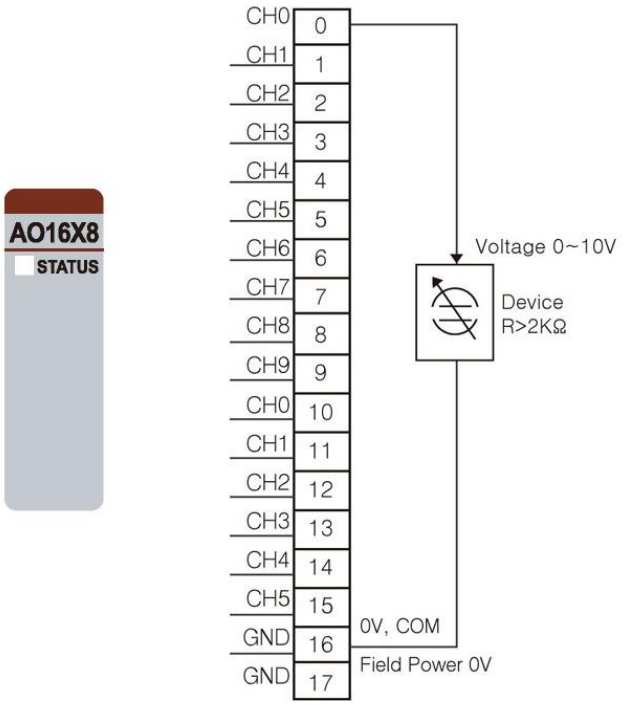

Pin No.	Signal Description
0	Output 0
1	Output 1
2	Output 2
3	Output 3
4	Output 4
5	Output 5
6	Output 6
7	Output 7
8	Output 8
9	Output 9
10	Output 10
11	Output 11
12	Output 12
13	Output 13
14	Output 14
15	Output 15
16	Output 16
17	Output Common(AGND)

2. LED Indicators

LED No.	LED Function / Description	LED Color
0	Output 0	Green

Status	LED	Indication
Uni-I/O Status	Off Green	Disconnection Connection
Field Power Error	Status Channel Repeat the Green and Off	Field power is unconnected.

URA-0004Y (AO04Y) - 4 Analog Current Outputs 16bit

Items	Specification
Outputs per module	4 Outputs single ended
Indicators(Logic side)	4 Green Output Status LEDs
Resolution in Ranges	16 bit (Include Sign) 15 bits : 0.61uA/bit
Output Range	0~20mA
Data Format	16bits Integer (2's complement)
Module Error	±0.1% Full Scale @ 25°C (77°F) ambient ±0.3% Full Scale @ -40°C to 70°C (-40°F to 158°F)
Load Resistance	Max. 250Ω *
Dignostic	Field Power Off : LED Blinking Field Power On : No Output LED Off Field Power On : Output LED ON
Conversion Time	Max. 150usec / All Output
Calibration	Not Required
Common Type	4 Channels / 4 Common
Power Dissipation	Max. 30mA @ 5VDC
Isolation	I/O to Logic : Photocoupler Isolation Field power : Non-Isolation
Field Power	Supply Voltage : 24VDC nominal Voltage Range : 18 to 32VDC Power Dissipation : Max. 80mA @ 24VDC
Wiring	I/O Cable Max. 2.0mm^2 (AWG 14)
Weight	58g
Module Size	12mm x 99mm x 70mm

* Operating temperature

-40°C to 70°C (-40°F to 158°F) temperature range specification can be guaranteed under the following conditions.

Load Resistance : Min 100Ω, Max 250Ω

Otherwise, temperature specification can be guranteed with -40°C, 60°C (-40°F to 140°F).

1. Wiring Diagram

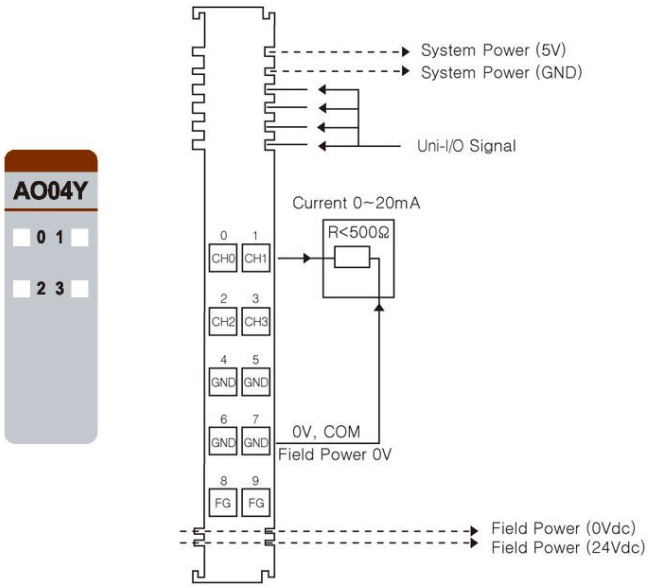

Pin No.	Signal Description	Pin No.	Signal Description
0	Analog Output 0	1	Analog Output 1
2	Analog Output 2	3	Analog Output 3
4	Output Common(AGND)	5	Output Common(AGND)
6	Output Common(AGND)	7	Output Common(AGND)
8	Field Ground	9	Field Ground

2. LED Indicators

LED No.	LED Function / Description	LED Color
0	Output 0	Green
1	Output 1	Green
2	Output 2	Green
3	Output 3	Green

Status	LED	Indication
Normal Operation	Off	No Output Value
	Green	Normal Operation
Field Power Error	All Output Repeat Green and Off	Field Power is unconnected.

URA-0008Y (AO08Y) - 8 Analog Current Outputs 16bit

Items	Specification
Outputs per module	8 Outputs single ended
Indicators(Logic side)	8 Green Output Status LEDs
Resolution in Ranges	16 bit (Include Sign) 15 bits : 0.61uA/bit
Output Range	0~20mA
Data Format	16bits Integer (2's complement)
Module Error	±0.1% Full Scale @ 25°C (77°F) ambient ±0.3% Full Scale @ -40°C to 60°C (-40°F to 140°F)
Load Resistance	Max. 250Ω *
Dignostic	Field Power Off : LED Blinking Field Power On : No Output LED Off Field Power On : Output LED ON
Conversion Time	Max. 250usec / All Output
Calibration	Not Required
Common Type	2 Common, Field Power 0V is Common(AGND)
Power Dissipation	Max. 30mA @ 5VDC
Isolation	I/O to Logic : Photocoupler Isolation Field power : Non-Isolation
Field Power	Supply Voltage : 24VDC nominal Voltage Range : 18 to 32VDC Power Dissipation : Max. 130mA @ 24VDC
Wiring	I/O Cable Max. 2.0mm^2 (AWG 14)
Weight	58g
Module Size	12mm x 99mm x 70mm
Operating temperature	-40°C to 70°C (-40°F to 158°F)

1. Wiring Diagram

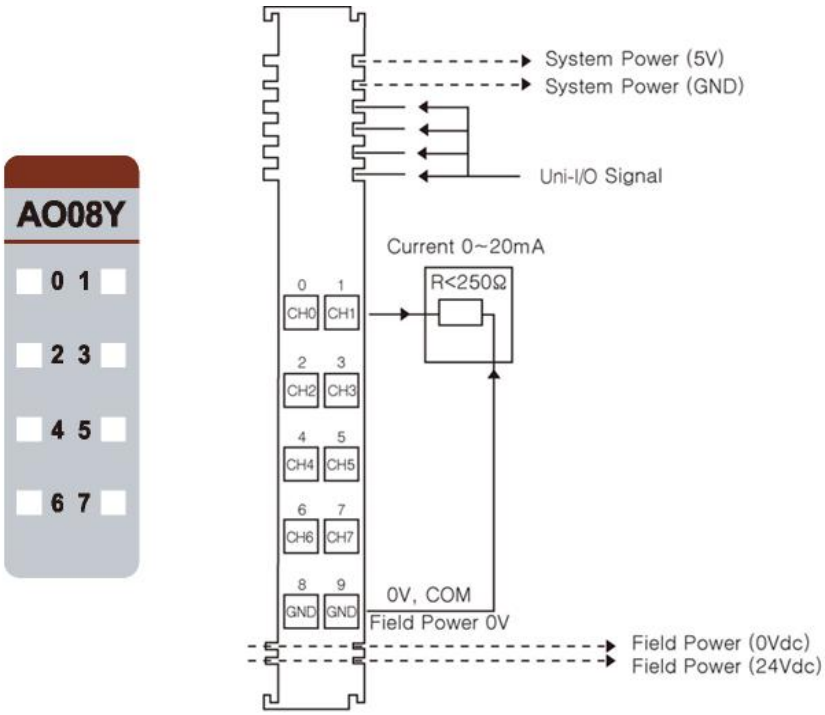

Pin No.	Signal Description	Pin No.	Signal Description
0	Analog Output 0	1	Analog Output 1
2	Analog Output 2	3	Analog Output 3
4	Analog Output 4	5	Analog Output 5
6	Analog Output 6	7	Analog Output 7
8	Output Common(AGND)	9	Output Common(AGND)

2. LED Indicators

LED No.	LED Function / Description	LED Color
0	Output 0	Green
1	Output 1	Green
2	Output 2	Green
3	Output 3	Green
4	Output 4	Green
5	Output 5	Green
6	Output 6	Green
7	Output 7	Green

tatus	LED	Indication
Normal Operation	No Output Channel Off Output Channel Green	No Output Output
Field Power Error	All Channel Repeat the Green and Off	Field power is unconnected.

URA-0004Z (AO04Z) - 4 Analog Voltage Outputs 16bit

Items	Specification
Outputs per module	4 Outputs single ended
Indicators(Logic side)	4 Green Output status
Resolution in Ranges	16 bit (Include Sign) 15 bits : 0.31mV/bit
Output Range	0 ~ 10VDC
Data Format	16bits Integer (2' compliment)
Module Error	±0.1% Full Scale @ 25°C (77°F) ambient ±0.3% Full Scale @ -40°C to 70°C (-40°F to 158°F)
Load Resistance	Min. 2KΩ
Conversion Time	Max. 150usec / All output
Diagnostic	Field Power Off: LED Blinking Field Power On: No Output LED Off Field Power On: Output LED On
Calibration	Not Required
Common Type	4 Common, Field Power 0V is Common(AGND)
Power dissipation	Max. 30mA @ 5.0Vdc
Isolation	I/O to Logic : Isolation Field power : Non-Isolation
Field Power	Supply Voltage : 24Vdc nominal Voltage Range : 18 to 32VDC Power Dissipation : Max. 35mA @ 24VDC
Wiring	I/O Cable Max. 2.0mm^2 (AWG 14)
Weight	58g
Module Size	12mm x 99mm x 70mm
Operating temperature	-40°C to 70°C (-40°F to 158°F)

1. Wiring Diagram

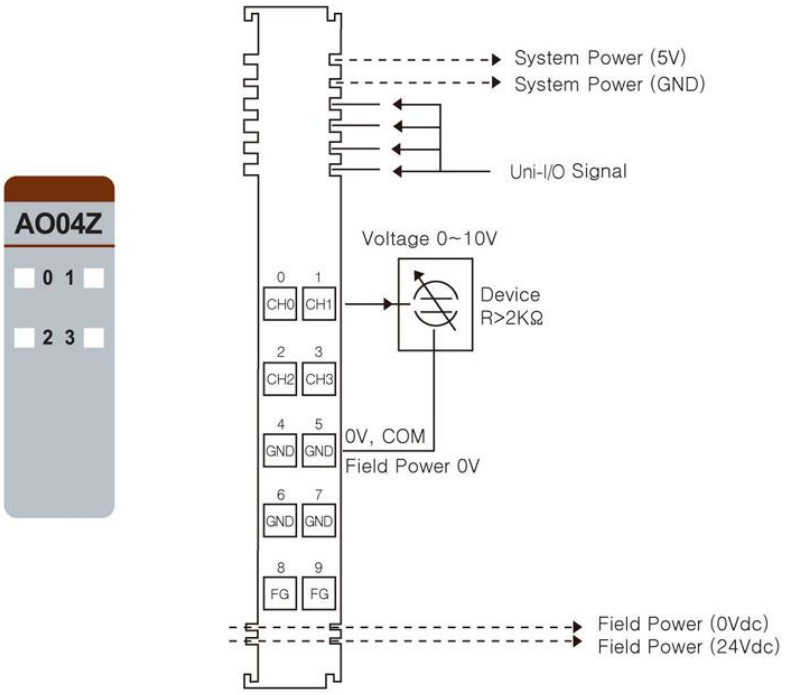

Pin No.	Signal Description	Pin No.	Signal Description
0	Analog Output 0	1	Analog Output 1
2	Analog Output 2	3	Analog Output 3
4	Output Common(AGND)	5	Output Common(AGND)
6	Output Common(AGND)	7	Output Common(AGND)
8	Field Ground	9	Field Ground

2. LED Indicators

LED No.	LED Function / Description	LED Color
0	Output 0	Green
1	Output 1	Green
2	Output 2	Green
3	Output 3	Green

Status	LED	Indication
Normal Operation	No Output Off Output Green	No Output Output
Field Power Error	All Channel Repeat the Green and Off	Field power is unconnected.

URA-0008Z (AO08Z) - 8 Analog Voltage Outputs 16bit

Items	Specification
Outputs per module	8 Outputs single ended
Indicators(Logic side)	8 Green Output status
Resolution in Ranges	16 bit (Include Sign) 15 bits : 0.31mV/bit
Output Range	0 ~ 10VDC
Data Format	16bits Integer (2' compliment)
Module Error	±0.1% Full Scale @ 25°C (77°F) ambient ±0.3% Full Scale @ -40°C to 70°C (-40°F to 158°F)
Load Resistance	Min. 2KΩ
Conversion Time	Max. 250usec / All output
Diagnostic	Field Power Off: LED Blinking Field Power On: No Output LED Off Field Power On: Output LED On
Calibration	Not Required
Common Type	2 Common, Field Power 0V is Common(AGND)
Power dissipation	Max. 30mA @ 5.0Vdc
Isolation	I/O to Logic : Isolation Field power : Non-Isolation
Field Power	Supply Voltage : 24Vdc nominal Voltage Range : 18 to 32VDC Power Dissipation : Max. 70mA @ 24VDC
Wiring	I/O Cable Max. 2.0mm^2 (AWG 14)
Weight	58g
Module Size	12mm x 99mm x 70mm
Operating temperature	-40°C to 70°C (-40°F to 158°F)

1. Wiring Diagram

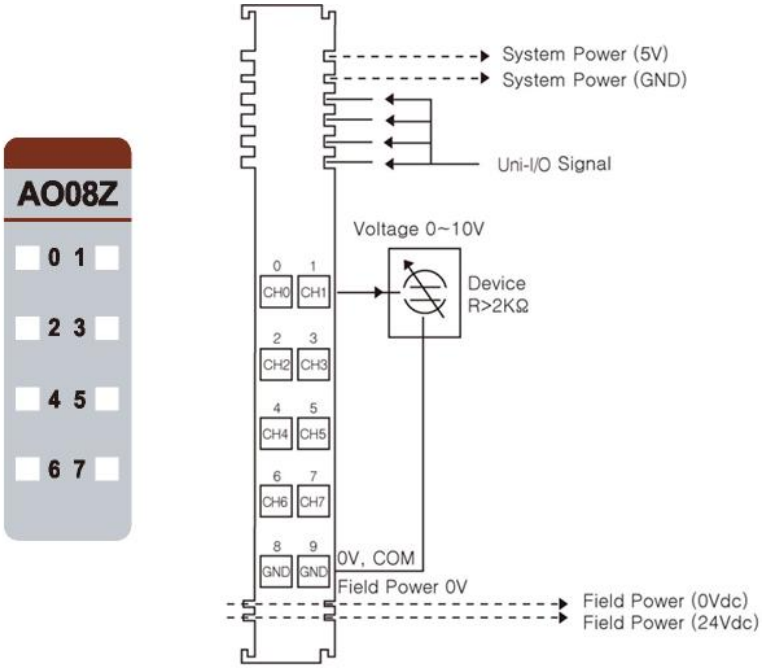

Pin No.	Signal Description	Pin No.	Signal Description
0	Analog Output 0	1	Analog Output 1
2	Analog Output 2	3	Analog Output 3
4	Analog Output 4	5	Analog Output 5
6	Analog Output 6	7	Analog Output 7
8	Output Common(AGND)	9	Output Common(AGND)

2. LED Indicators

LED No.	LED Function / Description	LED Color
0	Output 0	Green
1	Output 1	Green
2	Output 2	Green
3	Output 3	Green
4	Output 4	Green
5	Output 5	Green
6	Output 6	Green
7	Output 7	Green

Status	LED	Indication
Normal Operation	No Output Off Output Green	No Output Output
Field Power Error	All output Repeat the Green and Off	Field power is unconnected.

URA-0016Z-8 (AO16Z8) - 16 Analog Voltage Outputs 16bit

Items	Specification
Outputs per module	16 Channels single ended
Indicators(Logic side)	1 Green Uni-I/O status LED
Resolution in Ranges	16 bit (Include Sign) 15 bits : 0.31mV/Bit
Output Range	0 ~ 10Vdc
Data Format	16bits Integer (2' compliment)
Module Error	±0.1% Full Scale @ 25°C (77°F) ambient ±0.3% Full Scale @ -40°C, 60°C (-40°F to 140°F)
Load Resistance	Min. 2KΩ
Conversion Time	Max. 450usec (All channel)
Diagnostic	Field Power Off : LED Blinking
Calibration	Not Required
Common Type	2 Common, Field Power 0V is Common(AGND)
Power dissipation	Max. 30mA @ 5.0Vdc
Isolation	I/O to Logic : Isolation Field power : Non-Isolation
Field Power	Supply Voltage : 24VDC nominal Voltage Range : 18 to 32VDC Power Dissipation : Max. 150mA @ 24VDC, Load(2K)
Wiring	I/O Cable Max. 2.0mm^2 (AWG 14)
Weight	63g
Module Size	12mm x 109mm x 70mm
Operating temperature	-40°C, 60°C (-40°F to 140°F)

3. Wiring Diagram

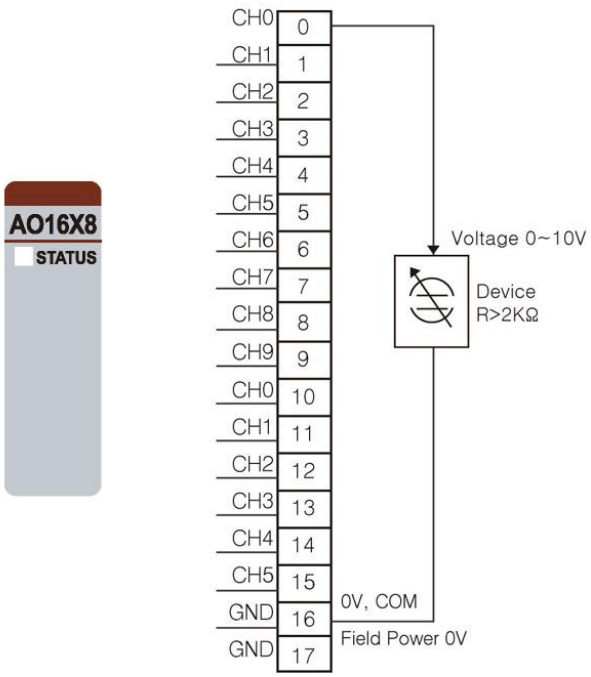

Pin No.	Signal Description
0	Output 0
1	Output 1
2	Output 2
3	Output 3
4	Output 4
5	Output 5
6	Output 6
7	Output 7
8	Output 8
9	Output 9
10	Output 10
11	Output 11
12	Output 12
13	Output 13
14	Output 14
15	Output 15
16	Output 16
17	Output Common(AGND)

4. LED Indicators

LED No.	LED Function / Description	LED Color
0	Output 0	Green
1	Output 1	Green
2	Output 2	Green
3	Output 3	Green
4	Output 4	Green
5	Output 5	Green
6	Output 6	Green
7	Output 7	Green
8	Output 8	Green
9	Output 9	Green
10	Output 10	Green
11	Output 11	Green
12	Output 12	Green
13	Output 13	Green
14	Output 14	Green
15	Output 15	Green

Status	LED	Indication
Uni-I/O Status	Off Green	Disconnection Connection
Field Power Error	Status Channel Repeat the Green and Off	Field power is Unconnected.

URS-04RT (S04RT) - 4 RTD / Resistance

Items	Specification
Inputs per module	4 Channels
Indicators(Logic side)	4 Green Input status
Sensor Types	RTD Input Range

RTD Input	Input Range
PT100, PT200, PT500, PT50	-200~850°c (-328°F, 1562°F)
PT1000	-200~350°c (-328°F, 662°F)
JPT100, JPT200, JPT500, JPT50	-200~640°c (-328°F, 1184°F)
JPT1000	-200~350°c (-328°F, 662°F)
NI100, NI200, NI500	-60~250°c (-76°F, 418°F)
NI1000	-60~180°c (-76°F, 356°F)
NI120	-80~260°c (-112°F, 500°F)
NI1000LG	-50~120°c (-58°F, 248°F)
Resistance Input	Input Range
100mΩ/bit	0~2000Ω
10mΩ/bit	0~327Ω
20mΩ/bit	0~620Ω
50mΩ/bit	0~1200Ω

Excitation Current	About 1mA
Connection Method	3-Wire
Conversion Time	< 150ms, All Channel
Data Format	16bits singed Integer (2' complement)
Module Accuracy	PT100, PT1000 : ±0.5°C (32.9°F) Full Scale @ 25°C (77°F) ambient ±0.1% Full Scale @ 25°C (77°F) ambient ±0.3% Full Scale @ -40°C,70°C (-40°F, 158°F)
Resolution of Data	RTD Type : ±0.1°C / F , Resitance Type : 100mΩ, 10mΩ, 20mΩ, 50mΩ
Calibration	Not Required
Diagnostic	Sensor open or range over, then conversion data = 0x8000(-32768)
Power dissipation	Max. 130mA @ 5.0VDC
Isolation	I/O to Logic : Isolation Field power : Not Connected
Field Power	Not used, Field power bypass to next expansion module
Wiring	I/O Cable Max. 2.0mm^2 (AWG 14)
Weight	60g
Module Size	12mm x 99mm x 70mm
Operating temperature	-40°C to 60°C (-40°F to 140°F)

1. Wiring Diagram

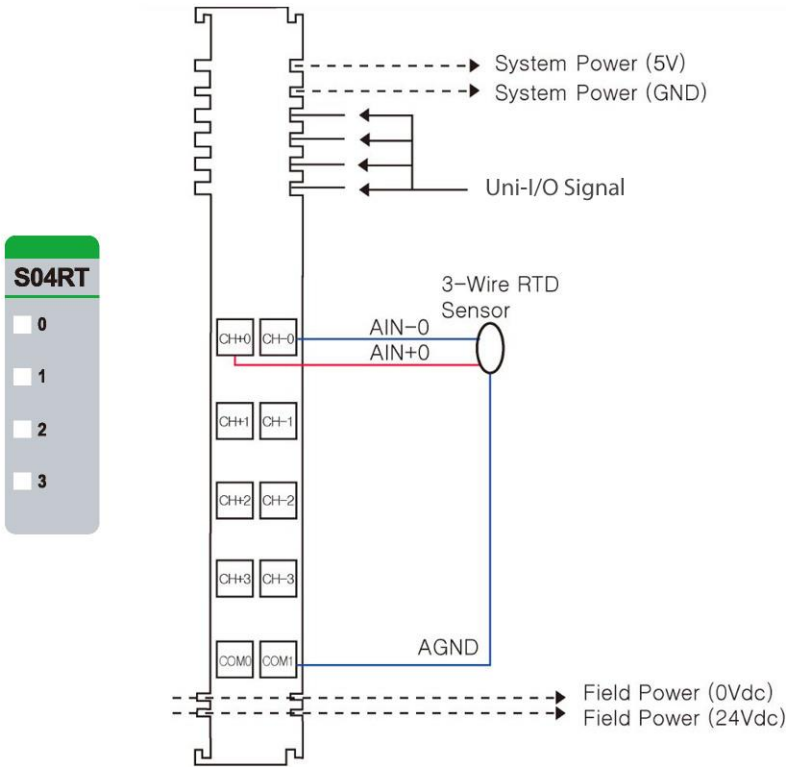

Pin No.	Signal Description	Pin No.	Signal Description
0	RTD 0+	1	RTD 0-
2	RTD 1+	3	RTD 1-
4	RTD 2+	5	RTD 2-
6	RTD 3+	7	RTD 3-
8	AGND	9	AGND

2. LED Indicators

LED No.	LED Function / Description	LED Color
0	Input 0	Green
1	Input 1	Green
2	Input 2	Green
3	Input 3	Green

Status	LED	Indication
Not Signal, Normal Operation	Off	Input Sensor Open or Input Range Over Normal Operation
On Signal Normal Operation	Green	Sensor Connected and Input Range Valid Normal Operation

URS-08RT-2 (S08RT2) - 8 RTD / Resistance

Items	Specification
Inputs per module	8 Channels
Indicators(Logic side)	8 Green Input status
Sensor Types	RTD Input Range RTD Input / Input Range PT100, PT200, PT500, PT50 / -200~850°c (-328°F, 1562°F) PT1000 / -200~350°c (-328°F, 662°F) JPT100, JPT200, JPT500, JPT50 / -200~640°c (-328°F, 1184°F) JPT1000 / -200~350°c (-328°F, 662°F) NI100, NI200, NI500 / -60~250°c (-76°F, 418°F) NI1000 / -60~180°c (-76°F, 356°F) NI120 / -80~260°c (-112°F, 500°F) NI1000LG / -50~120°c (-58°F, 248°F) Resistance Input / Input Range 100mΩ/bit / 0~2000Ω 10mΩ/bit / 0~327Ω 20mΩ/bit / 0~620Ω 50mΩ/bit / 0~1200Ω
Excitation Current	About 1mA
Connection Method	3-Wire
Conversion Time	< 280ms, All Channel
Data Format	16bits signed Integer (2' complement)
Module Accuracy	PT100, PT1000 type Range ±0.5°C(32.9°F) @ 25°C (77°F) All type Input Range ±0.1% Full Scale @ 25°C (77°F) ambient ±0.3% Full Scale @ 40°C to 70°C (-40°F to 158°F)
Resolution of Data	RTD Type : ±0.1°C / F , Resitance Type : 100mΩ, 10mΩ, 20mΩ, 50mΩ
Calibration	Not Required
Diagnostic	Sensor open or range over, then conversion data = 0x8000(-32768)
Power dissipation	Max. 120mA @ 5.0VDC
Isolation	I/O to Logic : Isolation Field power : Not Connected
Field Power	Not used, Field power bypass to next expansion module
Wiring	I/O Cable Max. 2.0mm^2 (AWG 14)
Weight	60g
Module Size	12mm x 99mm x 70mm
Operating temperature	-40°C to 70°C (-40°F to 158°F)

1. Wiring Diagram

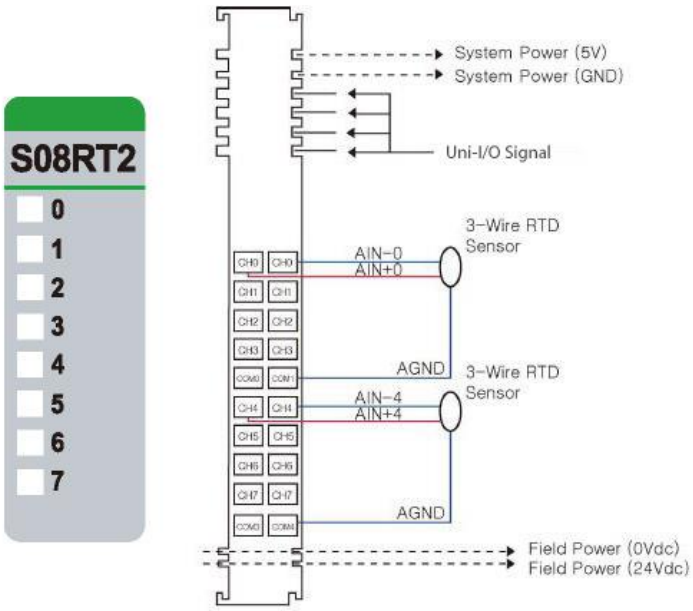

Pin No.	Signal Description	Signal Description	Pin No.
0	RTD 0+	RTD 0-	1
2	RTD 1+	RTD 1-	3
4	RTD 2+	RTD 2-	5
6	RTD 3+	RTD 3-	7
8	AGND	AGND	9
10	RTD 4+	RTD 4-	11
12	RTD 5+	RTD 5-	13
14	RTD 6+	RTD 6-	15
16	RTD 7+	RTD 7-	17
18	AGND	AGND	19

2. LED Indicators

LED No.	LED Function / Description	LED Color
0	Input 0	Green
1	Input 1	Green
2	Input 2	Green
3	Input 3	Green
4	Input 4	Green
5	Input 5	Green
6	Input 6	Green
7	Input 7	Green

Status	LED	Indication
No Signal, Normal Operation	Off	Input Sensor Open or Input Range Over Normal Operation
On Signal Normal Operation	Green	Sensor Connected and Input Range Valid Normal Operation

URS-04TC (S04TC) - 4 Thermocouple / mV

<table>
<tr><th>Items</th><th>Specification</th></tr>
<tr><td>Inputs per module</td><td>4 Channels</td></tr>
<tr><td>Indicators(Logic side)</td><td>4 Green Input status , 1 Green Input CJ status</td></tr>
<tr><td>Sensor Types</td><td>Thermal Couple Input Range
<table>
<tr><th>Type</th><th>Maximum Input Range</th><th>Recommended Input Range</th></tr>
<tr><td>K</td><td>-270 ~ 1372°c (-454°F, 2420.6°F)</td><td>-200 ~1200°c (-328°F, 2192°F)</td></tr>
<tr><td>J</td><td>-210 ~ 1200°c (-346°F, 2192°F)</td><td>-40 ~ 1100°c (-40°F, 2012°F)</td></tr>
<tr><td>T</td><td>-270 ~ 400°c (-454°F, 752°F)</td><td>-200 ~ 350°c (-328°F, 662°F)</td></tr>
<tr><td>B</td><td>30 ~ 1820°c (86°F, 3308°F)</td><td>600 ~ 1700°c (-1112°F, 3092°F)</td></tr>
<tr><td>R</td><td>-50~1768°c (-58°F, 3214.4°F)</td><td>0 ~ 1600°c (-32°F, 2912°F)</td></tr>
<tr><td>S</td><td>-50 ~ 1768°c (-58°F, 3214.4°F)</td><td>0 ~ 1600°c (-32°F, 2912°F)</td></tr>
<tr><td>E</td><td>-270 ~ 1000°c (-454°F, 1832°F)</td><td>-200 ~ 800°c (-328°F, 1472°F)</td></tr>
<tr><td>N</td><td>-270 ~ 1300°c (-454°F, 2372°F)</td><td>-200 ~ 1250°c (-328°F, 2282°F)</td></tr>
<tr><td>L</td><td>-200 ~ 900°c (-328°F, 1652°F)</td><td>-100 ~ 850°c (-148°F, 1562°F)</td></tr>
<tr><td>U</td><td>-200 ~ 600°c (-328°F, 1112°F)</td><td>-100 ~ 550°c (-148°F, 1022°F)</td></tr>
<tr><td>C</td><td>0 ~ 2310°c (-32°F, 4190°F)</td><td>100 ~ 2100°c (212°F, 3812°F)</td></tr>
<tr><td>D</td><td>0 ~ 2490°c (-32°F, 4514°F)</td><td>100 ~ 2200°c (212°F, 3992°F)</td></tr>
<tr><td>10uV Input</td><td colspan="2">-81.0 ~ 81.0mV, 10uV/ 1 Count</td></tr>
<tr><td>1uV Input</td><td colspan="2">-32.7 ~ 32.7mV, 1uV/ 1 Count</td></tr>
<tr><td>2uV Input</td><td colspan="2">-65.5 ~ 65.5mV, 2uV/ 1 Count</td></tr>
</table></td></tr>
<tr><td>Module Accuracy
(Need 20 minute preheating
to get enhanced accuracy.)</td><td>Recommend Input Range
±0.1% Recommended Scale @ 25°C(77°F) ambient
±0.3% Recommended Scale @ 40°C to 70°C (-40°F to 158°F)

C/D type Recommend Input Range
±0.3% Recommended Scale @ 40°C to 70°C (-40°F to 158°F)
External Cold Jucntion(PT100)
±2% Recommended Scale @ 40°C to 70°C (-40°F to 158°F)</td></tr>
<tr><td>Connection Method</td><td>2-Wire</td></tr>
<tr><td>Conversion Time</td><td>Average Conversion time < 200ms</td></tr>
<tr><td>Data Format</td><td>16bits Integer (2' complement)</td></tr>
<tr><td>Cold junction temperature</td><td>Internal
- TMP275AIDGKR : -40°C to 125°C (-40°F to 257°F)
External
- PT100 : -45°C to 95°C (-40°F to 203°F)</td></tr>
<tr><td>Calibration</td><td>Not Required</td></tr>
<tr><td>Diagnostic</td><td>Sensor open or range over, then conversion data = 0x8000(-32768)
* Connected External CJ : CJ LED On.
Not Connected External CJ : CJ LED Off.</td></tr>
<tr><td>Power dissipation</td><td>Max. 130mA @ 5.0VDC</td></tr>
<tr><td>Isolation</td><td>I/O to Logic : Isolation
Field power : Not Connected</td></tr>
<tr><td>Field Power</td><td>Not used, Field power bypass to next expansion module</td></tr>
<tr><td>Wiring</td><td>I/O Cable Max. 2.0mm^2 (AWG 14)</td></tr>
<tr><td>Weight</td><td>60g</td></tr>
<tr><td>Module Size</td><td>12mm x 99mm x 70mm</td></tr>
<tr><td>Operating temperature</td><td>-40°C to 70°C (-40°F to 158°F)</td></tr>
</table>

1. Wiring Diagram

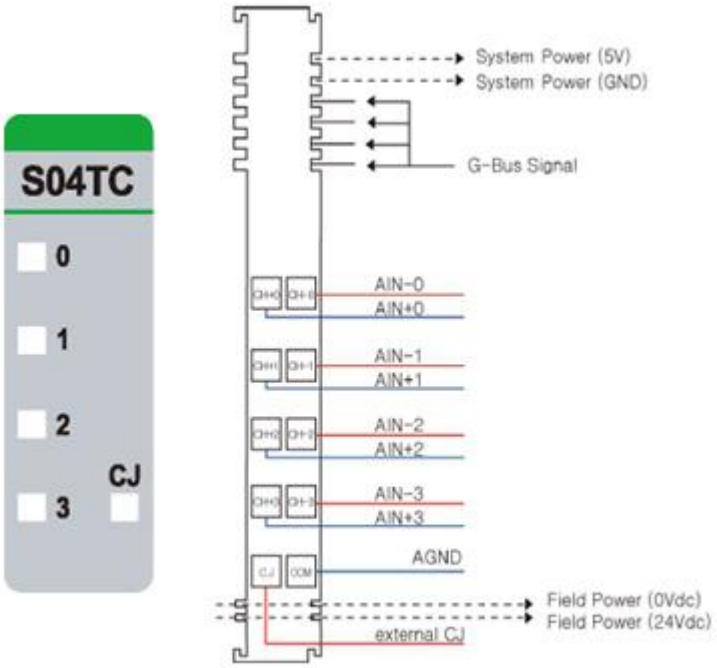

Pin No.	Signal Description	Signal Description	Pin No.
0	TC 0+	TC 0-	1
2	TC 1+	TC 1-	3
4	TC 2+	TC 2-	5
6	TC 3+	TC 3-	7
8	CJ	AGND	9

2. LED Indicators

LED No.	LED Function / Description	LED Color
0	Input 0	Green
1	Input 1	Green
2	Input 2	Green
3	Input 3	Green
CJ	Input CJ	Green

Status	LED	Indication
Not Signal, Normal Operation	Channel LED Off, CJ LED Off	Input Sensor Open or Input Range Over Normal Operation
On Signal Normal Operation	Channel LED Off, CJ LED Off	Sensor Connected and Input Range Valid Normal Operation
On Signal Normal Operation Connected External CJC	Channel LED Off, CJ LED Off	Sensor Connected and Input Range Valid Normal Operation, External CJ enable

URS-08TC-2 (S08TC2) - 8 Thermocouple / mV

<table>
<tr><th>Items</th><th>Specification</th></tr>
<tr><td>Inputs per module</td><td>8 Channels</td></tr>
<tr><td>Indicators(Logic side)</td><td>8 Green Input status , 1 Green Input CJ status</td></tr>
<tr><td>Sensor Types</td><td>Thermal Couple Input Range
<table>
<tr><td>Type</td><td>Maximum Input Range</td><td>Recommended Input Range</td></tr>
<tr><td>K</td><td>-270 ~ 1372°c (-454°F, 2420.6°F)</td><td>-200 ~1200°c (-328°F, 2192°F)</td></tr>
<tr><td>J</td><td>-210 ~ 1200°c (-346°F, 2192°F)</td><td>-40 ~ 1100°c (-40°F, 2012°F)</td></tr>
<tr><td>T</td><td>-270 ~ 400°c (-454°F, 752°F)</td><td>-200 ~ 350°c (-328°F, 662°F)</td></tr>
<tr><td>B</td><td>30 ~ 1820°c (86°F, 3308°F)</td><td>600 ~ 1700°c (-1112°F, 3092°F)</td></tr>
<tr><td>R</td><td>-50~1768°c (-58°F, 3214.4°F)</td><td>0 ~ 1600°c (-32°F, 2912°F)</td></tr>
<tr><td>S</td><td>-50 ~ 1768°c (-58°F, 3214.4°F)</td><td>0 ~ 1600°c (-32°F, 2912°F)</td></tr>
<tr><td>E</td><td>-270 ~ 1000°c (-454°F, 1832°F)</td><td>-200 ~ 800°c (-328°F, 1472°F)</td></tr>
<tr><td>N</td><td>-270 ~ 1300°c (-454°F, 2372°F)</td><td>-200 ~ 1250°c (-328°F, 2282°F)</td></tr>
<tr><td>L</td><td>-200 ~ 900°c (-328°F, 1652°F)</td><td>-100 ~ 850°c (-148°F, 1562°F)</td></tr>
<tr><td>U</td><td>-200 ~ 600°c (-328°F, 1112°F)</td><td>-100 ~ 550°c (-148°F, 1022°F)</td></tr>
<tr><td>C</td><td>0 ~ 2310°c (-32°F, 4190°F)</td><td>100 ~ 2100°c (212°F, 3812°F)</td></tr>
<tr><td>D</td><td>0 ~ 2490°c (-32°F, 4514°F)</td><td>100 ~ 2200°c (212°F, 3992°F)</td></tr>
<tr><td>10uV Input</td><td colspan="2">-81.0 ~ 81.0mV, 10uV/ 1 Count</td></tr>
<tr><td>1uV Input</td><td colspan="2">-32.7 ~ 32.7mV, 1uV/ 1 Count</td></tr>
<tr><td>2uV Input</td><td colspan="2">-65.5 ~ 65.5mV, 2uV/ 1 Count</td></tr>
</table></td></tr>
<tr><td>Module Accuracy
(Need 20 minute preheating
to get enhanced accuracy.)</td><td>Recommend Input Range
±0.1% Recommended Scale @ 25°C (77°F) ambient
±0.3% Recommended Scale @ 40°C to 70°C (-40°F to 158°F)

T,B,R,S,C,D type Recommend Input Range
±0.3% Recommended Scale @ 40°C to 70°C (-40°F to 158°F)
External Cold Junction(PT100)
±2%Recommended Scale @ 40°C to 70°C (-40°F to 158°F)</td></tr>
<tr><td>Connection Method</td><td>2-Wire</td></tr>
<tr><td>Conversion Time</td><td>Average Conversion time < 330 ms</td></tr>
<tr><td>Cold junction temperature</td><td>Internal
- TMP275AIDGKR : -40°C to 125°C (-40°F to 257°F)
External
- PT100 : -45°C to 95°C (-40°F to 203°F)</td></tr>
<tr><td>Data Format</td><td>16bits Integer (2' complement)</td></tr>
<tr><td>Calibration</td><td>Not Required</td></tr>
<tr><td>Power dissipation</td><td>Max. 150mA @ 5.0Vdc</td></tr>
<tr><td>Isolation</td><td>I/O to Logic : Isolation
Field power : Not Connected</td></tr>
<tr><td>Field Power</td><td>Not used, Field power bypass to next expansion module</td></tr>
<tr><td>Wiring</td><td>I/O Cable Max. 2.0mm^2 (AWG 14)</td></tr>
<tr><td>Weight</td><td>60g</td></tr>
<tr><td>Module Size</td><td>12mm x 99mm x 70mm</td></tr>
<tr><td>Operating temperature</td><td>-40°C to 70°C (-40°F to 158°F)</td></tr>
</table>

1. Wiring Diagram

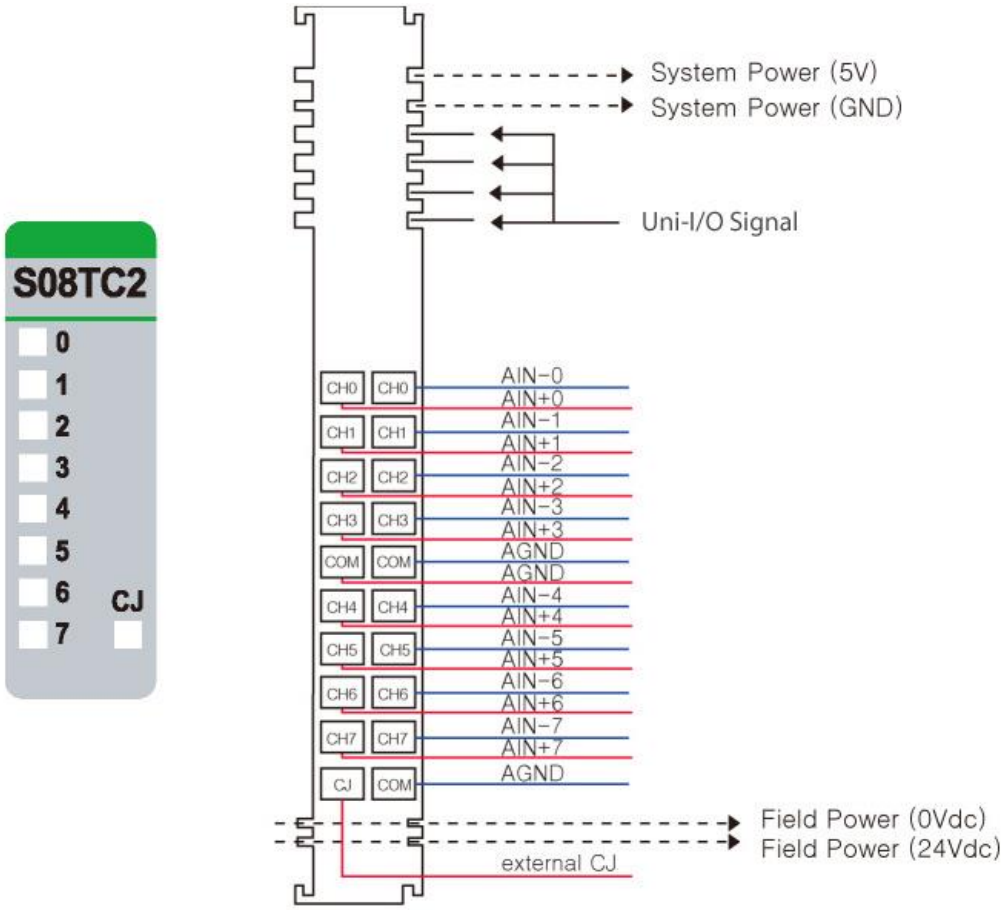

Pin No.	Signal Description	Signal Description	Pin No.
0	TC 0+	TC 0-	1
2	TC 1+	TC 1-	3
4	TC 2+	TC 2-	5
6	TC 3+	TC 3-	7
8	AGND	AGND	9
10	TC 4+	TC 4-	11
12	TC 5+	TC 5-	13
14	TC 6+	TC 6-	15
16	TC 7+	TC 7-	17
18	Cold Junction Sensor	AGND	19

2. LED Indicators

LED No.	LED Function / Description	LED Color
0	Input 0	Green
1	Input 1	Green
2	Input 2	Green
3	Input 3	Green
4	Input 4	Green
5	Input 5	Green
6	Input 6	Green
7	Input 7	Green

Status	LED	Indication
Not Signal, Normal Operation	Channel LED Off, CJ LED Off	Input Sensor Open or Input Range Over Normal Operation
On Signal Normal Operation	Channel LED Off, CJ LED Off	Sensor Connected and Input Range Valid Normal Operation
On Signal Normal Operation Connected External CJC	Channel LED Off, CJ LED Off	Sensor Connected and Input Range Valid Normal Operation, External CJ enable

URS-02LC-8 (S02LC) - 2 CH Load Cell input

Items	Specification
Number of channels	2 channels, Strain gauge input
Input type	Resistor bridge, Strain gauge
Indicators	Run 0,1 / Tare 0,1 Error_Sig.voltage 0,1 / Error_Ref.voltage 0,1 8 Green LED
Input range VSEN	-150mV ~ +150mV
Input range VREF	0 ~10V
Interanl resistance	> 1 MΩ (VSEN, VREF)
Measuring error	< ±0.1% Full Scale @ 25℃ ambient < ±0.3% Full Scale @ -40 ~ 60℃ ambient
Resolution	24bit, 32bit presentation
Conversion time	Max. 500us
Filter	Max. 64 samples filtering, parameterisable
Special features	Open load check, Tare, 5VDC bridge supply
Voltage source	5V dc nominal **
Current rate	Max. 30mA
On-state voltage	24V dc nominal
Internal resistance	11.4k ohm
Power dissipation	Max. 25mA @ 5.0Vdc
Isolation	I/O to Logic : Photocoupler Isolation Field power : Non-Isolation
Field Power	Supply Voltage: 24Vdc nominal Voltage Range: 18~32Vdc Power Dissipation: Max. 25mA @ 24Vdc
Wiring	I/O Cable Max. 2.0mm^2(AWG 14)
Weight	63g
Module Size	12mm x 109mm x 70mm
Operating temperature	-40°C to 60°C (-40°F to 140°F)

1. Wiring Diagram

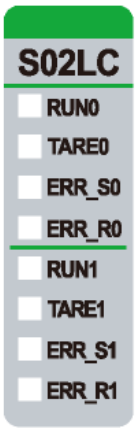

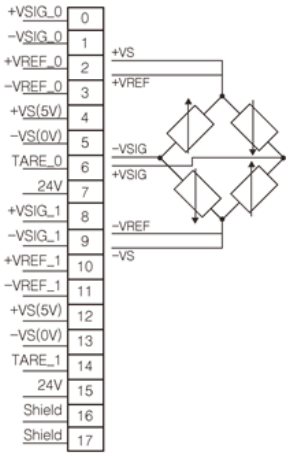

Pin No.	Signal Description	Pin No.	Signal Description
0	Bridge signal input voltage + #0	9	Bridge signal input voltage - #1

1	Bridge signal input voltage - #0	10	Bridge reference input voltage + #1
2	Bridge reference input voltage + #0	11	Bridge reference input voltage + #1
3	Bridge reference input voltage + #0	12	+5V(bridge supply)
4	+5V(bridge supply)	13	0V(bridge supply)
5	0V(bridge supply)	14	Tare input(24V) #1
6	Tare input(24V) #0	15	Field power(24V)
7	Field power(24V)	16	Shield
8	Bridge signal input voltage + #1	17	Shield

2. LED Indicators

LED No.	LED Function / Description	LED Color
0	Run #0	Green
1	Tare #0	Green
2	Error signal voltage #0	Green
3	Error reference voltage #0	Green
4	Run #1	Green
5	Tare #1	Green
6	Error signal voltage #1	Green
7	Error reference voltage #1	Green

Status	LED	Indication
Run	Off	G-bus fault / Not power supply
	On	Normal operation
Tare	Off	Taring calibration off (H/W or S/W)
	On	Taring calibration on (H/W or S/W)
Error signal voltage	Off	Normal operation
	On	Bridge signal input voltage range over / Open load
Error reference voltage	Off	Normal operation
	On	Bridge reference input voltage range over

URP-PS24V (PS24) - Input 24VDC, Output system Power 5VDC/1A

Items	Specification
System Input Voltage range	15VDC to 32VDC
System Power Input Voltage	Normal 24VDC
Indicators	1 Green System Power state , 1 Green Field Power state, 1 Green Uni-I/O state
Field Power Input Voltage	Normal 24VDC (±20%)
Field Power Contacts Current	Max. 10A Operating Temperature -40°C to 50°C (-40°F to 122°F) : Max. 10A 50°C to 70°C (122F to 158°F) : Max. 7A
Uni-I/O Output Voltage	Max. 5VDC, 1A
System power Dissipation	Max. 20mA @ 24VDC
Wring	I/O Cable Max. 2.0mm^2 (AWG 14)
Weight	59g
Module size	12mm x 99mm x 70mm
Operating temperature	-40°C to 70°C (-40°F to 158°F) temperature range specification can be guaranteed under the following conditions: Current for I/O Modules : Under 0.4A. Otherwise, temperature specification can be guaranteed with -40°C to 60°C (-40°F to 140°F)

1. Wiring Diagram

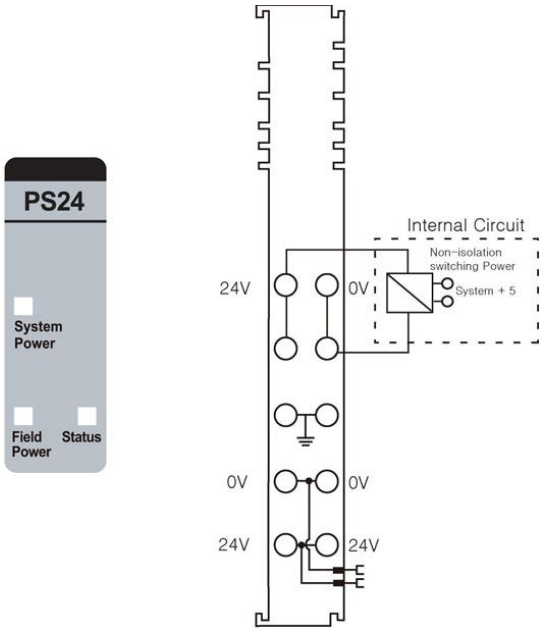

Pin No.	Signal Description	Pin No.	Signal Description
0	System Power, 24V	1	System Power, Ground
2	System Power, 24V	3	System Power, Ground
4	F.G	5	F.G
6	Field Power, Ground	7	Field Power, Ground
8	Field Power, 24V	9	Field Power, 24V

2. LED Indicators

LED No.	LED Function / Description	LED Color
System Power	System Power	Green
Field Power	Field Power	Green
Status	Internal Bus Status	Green

Status	LED	Indication
On Signal	Green	Normal Operation
Not Signal	Off	Normal Operation

Status	LED	To indicate
Normal signal.	Green	The unit is operating in normal condition. (After normal initialization of RBUS communication, this LED maintains ON status.)
Absence of data size.	Flashing green	Although this module is connected normally, there are not input/output data for communication.
Absence of network adapter	Off	Network adapter is not connected to this module.

3. Use Scenario

- URP-PS24V is system internal power expansion module.
- The URB-TCP network adapter system supplies a current of 1.5A If your system current requirements exceed 1.5A, add a power supply such as the URP-PS24V.
- Position the power supply directly before the first module that will cause the requirement to exceed 1.5A, as shown in the example below.

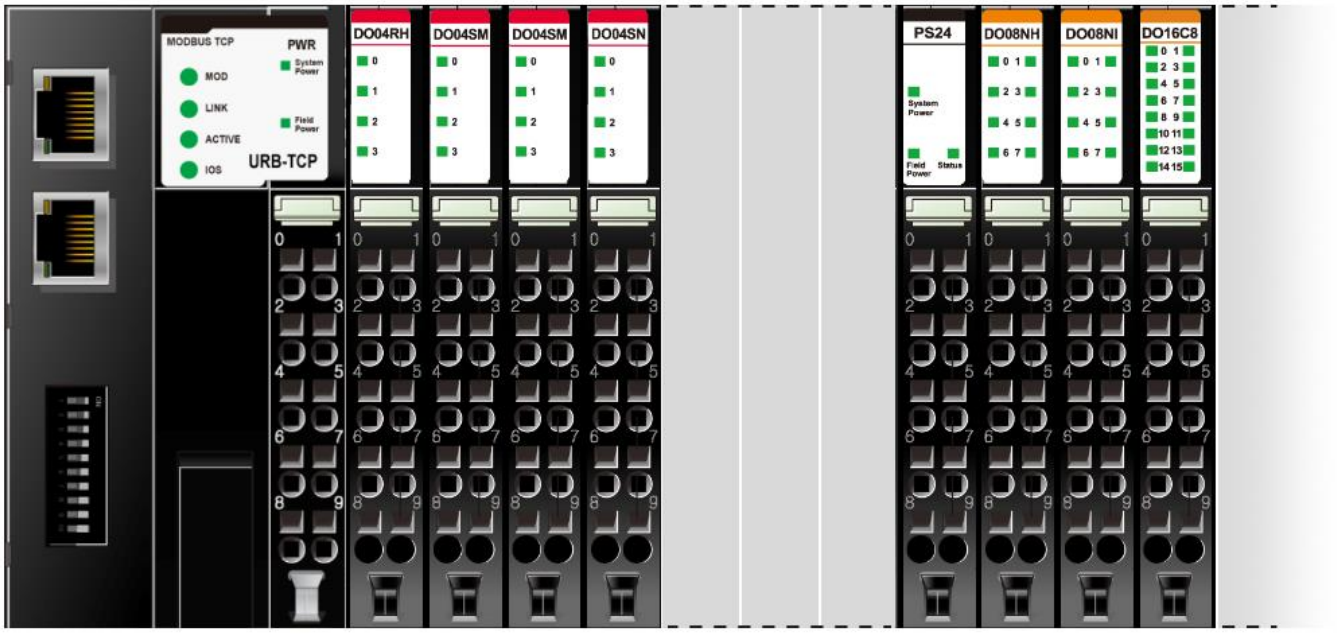

URP-C0V0V (PC00) - 8 0VDC Potential Distribution

Items	Specification
Field Power Voltage	Norminal 24VDC
Field Power Contacts Current	Max. 10A Operating Temperature -40°C to 50°C (-40°F to 122°F): Max. 10A 50°C to 70°C (122F to 158°F) : Max. 7A
Indicator	1 Green LEDs 1 Green Internal Bus State
System Power Dissipation	Max. 30mA @ 5VDC
Wiring	I/O Cable Max. 2.0mm^2 (AWG 14)
Weight	70g Max.
Module Size	12mm x 99mm x 70mm
Operating temperature	-40°C to 70°C (-40°F to 158°F)

1. Wiring Diagram

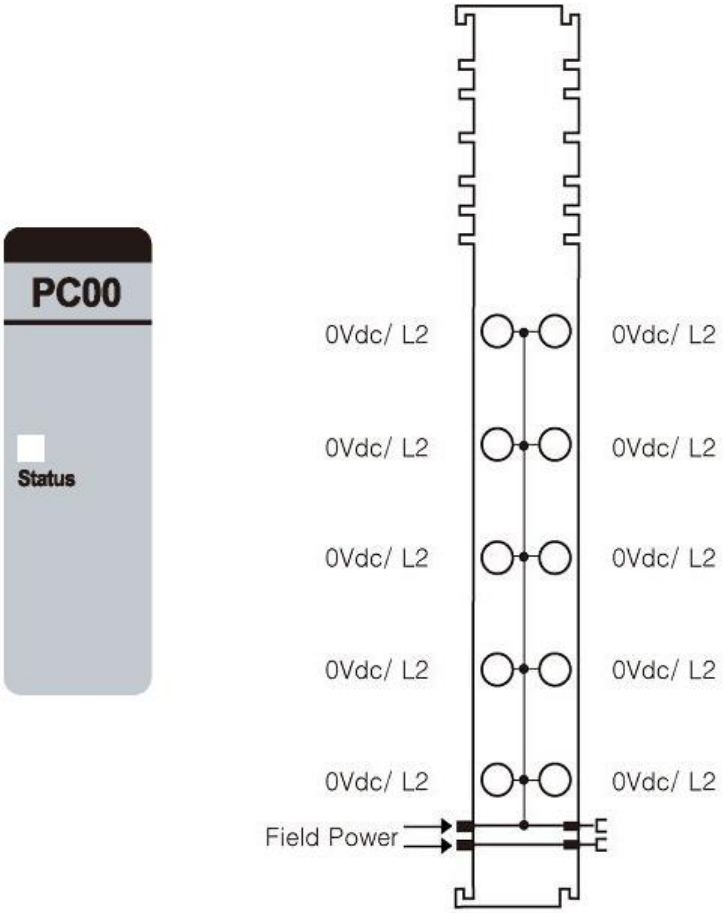

Pin No.	Signal Description	Pin No.	Signal Description
0	0VDC/L2	1	0VDC/L2
2	0VDC/L2	3	0VDC/L2
4	0VDC/L2	5	0VDC/L2
6	0VDC/L2	7	0VDC/L2
8	0VDC/L2	9	0VDC/L2

2. LED Indicators

LED No.	LED Function / Description	LED Color
Status	Internal Bus Status	Green

Status	LED	To indicate
Normal signal.	Green	The unit is operating in normal condition. (After normal initialization of internal communication, this LED maintains ON status.)
Absence of network adapter	Off	Network adapter is not connected to this module.

URP-C24V24V (PC2424) - 8 24VDC Potential Distribution

Items	Specification
Field Power Voltage	Norminal 24VDC
Field Power Contacts Current	Max. 10A Operating Temperature -40°C to 50°C (-40°F to 122°F): Max. 10A 50°C to 70°C (122F to 158°F) : Max. 7A
Indicator	1 Green LEDs 1 Green Internal Bus State
System Power Dissipation	Max. 30mA @ 5VDC
Wiring	I/O Cable Max. 2.0mm^2 (AWG 14)
Weight	70g Max.
Module Size	12mm x 99mm x 70mm
Operating temperature	-40°C to 70°C (-40°F to 158°F)

1. Wiring Diagram

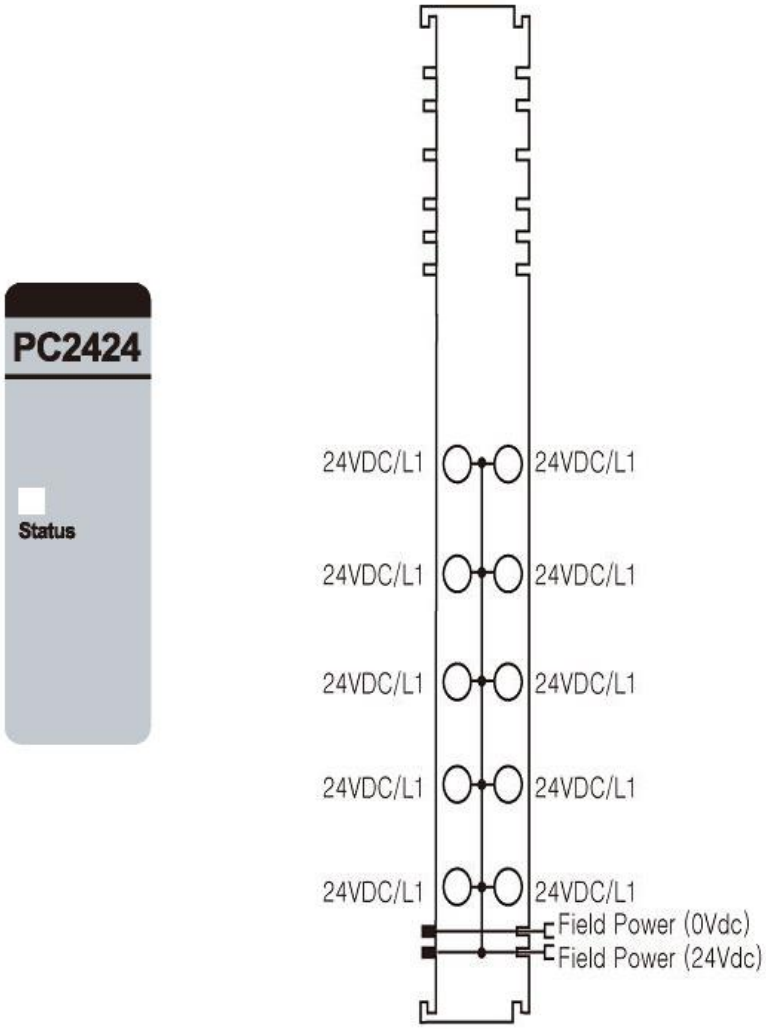

Pin No.	Signal Description	Pin No.	Signal Description
0	24VDC/L1	1	24VDC/L1
2	24VDC/L1	3	24VDC/L1
4	24VDC/L1	5	24VDC/L1
6	24VDC/L1	7	24VDC/L1
8	24VDC/L1	9	24VDC/L1

2. LED Indicators

LED No.	LED Function / Description	LED Color
Status	Internal Bus Status	Green

Status	LED	To indicate
Normal signal.	Green	The unit is operating in normal condition. (After normal initialization of internal communication, this LED maintains ON status.)
Absence of network adapter	Off	Network adapter is not connected to this module.

URP-C0V24V (PC024) - 4 24VDC, 4 0VDC Potential Distribution

Items	Specification
Field Power Voltage	Norminal 24VDC
Field Power Contacts Current	Max. 10A Operating Temperature -40°C to 50°C (-40°F to 122°F): Max. 10A 50°C to 70°C (122F to 158°F) : Max. 7A
Indicator	1 Green LEDs 1 Green Internal Bus State
System Power Dissipation	Max. 30mA @ 5VDC
Wiring	I/O Cable Max. 2.0mm^2 (AWG 14)
Weight	70g Max.
Module Size	12mm x 99mm x 70mm
Operating temperature	-40°C to 70°C (-40°F to 158°F)

1. Wiring Diagram

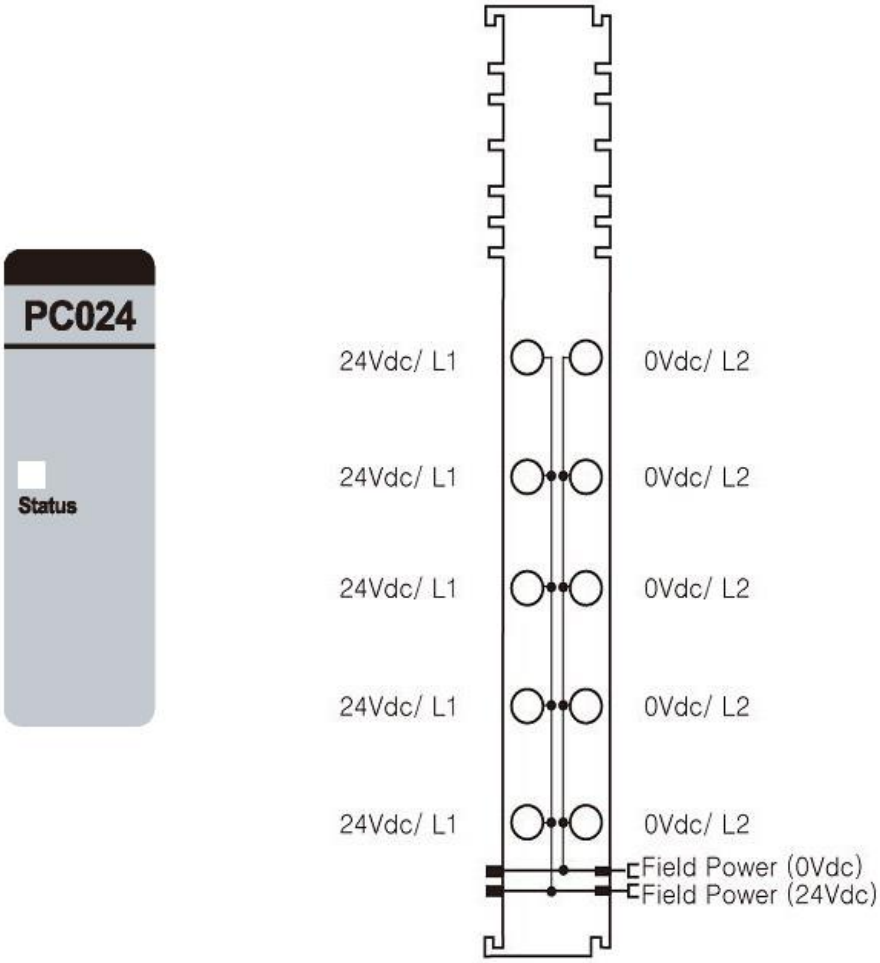

Pin No.	Signal Description	Pin No.	Signal Description
0	24VDC/L1	1	0VDC/L2
2	24VDC/L1	3	0VDC/L2
4	24VDC/L1	5	0VDC/L2
6	24VDC/L1	7	0VDC/L2
8	24VDC/L1	9	0VDC/L2

2. LED Indicators

LED No.	LED Function / Description	LED Color
Status	Internal Bus Status	Green

Status	LED	To indicate
Normal signal.	Green	The unit is operating in normal condition. (After normal initialization of internal communication, this LED maintains ON status.)
Absence of network adapter	Off	Network adapter is not connected to this module.

URP-PDIST (PPDIST) - External Universal Power Distribution

Items	Specification
Field Power Voltage	Nominal 24VDC
Field Power Contacts Current	Max. 10A Operating Temperature -40°C to 50°C (-40°F to 122°F): Max. 10A 50°C to 70°C (122F to 158°F) : Max. 7A
Indicator	1 Green LEDs 1 Green Internal Bus State
System Power Dissipation	Max. 30mA @ 5VDC
Wiring	I/O Cable Max. 2.0mm^2 (AWG 14)
Weight	70g Max.
Module Size	12mm x 99mm x 70mm
Operating temperature	-40°C to 70°C (-40°F to 158°F)

1. Wiring Diagram

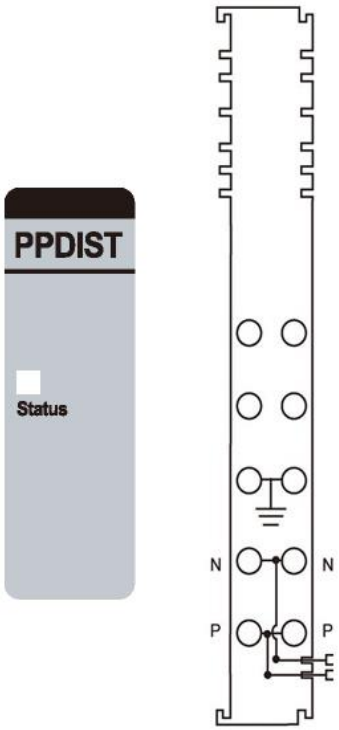

Pin No.	Signal Description	Pin No.	Signal Description
0	NC	1	NC
2	NC	3	NC
4	F.G	5	F.G
6	Field Power, Arbitrary (N)	7	Field Power, Arbitrary (N)
8	Field Power, Arbitrary (P)	9	Field Power, Arbitrary (P)

2. LED Indicators

LED No.	LED Function / Description	LED Color
Status	Internal Bus Status	Green

Status	LED	To indicate
Normal signal.	Green	The unit is operating in normal condition. (After normal initialization of internal communication, this LED maintains ON status.)
Absence of network adapter	Off	Network adapter is not connected to this module.

3. Use Scenario

Field Power	
URB-TCP	10A max.
URB-TCP2	8A max.
URP-PDIST	10A max.

a. Each URB series output unit can provide specified amount of current to connected end devices like: contactors, solenoids, sensors and etc.

b. In case that the calculated required field power consumption exceeds the maximal provided current by the network adapter, URP-PDIST module must be added.

   For example:

   URD-0008CH can provide 0.5A per channel, total of 4A per module.

   URD-04PW can provide 0.5A per channel, total of 2A per module.

   So if the system have 2 X URD-0008CH and 1 X URD-04PW attached directly to the network adapter and all channels current usage it the maximal allowed, we need to add URP-PDIST is additional output modules attached.

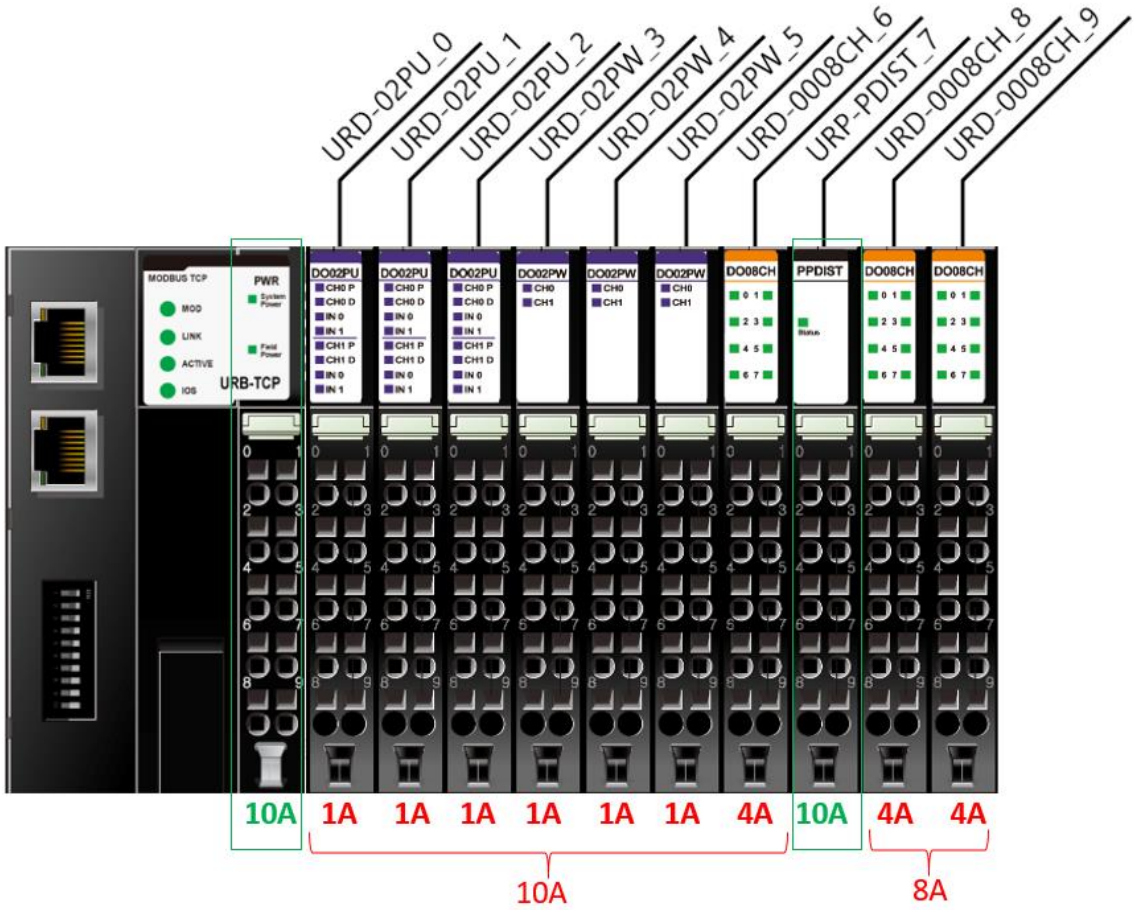
URD-02PU_0
URD-02PU_1
URD-02PU_2
URD-02PW_3
URD-02PW_4
URD-02PW_5
URD-0008CH_6
URP-PDIST_7
URD-0008CH_8
URD-0008CH_9
MODBUS TCP
PWR
MOD
LINK
ACTIVE
IOS
URB-TCP
DO02PU
DO02PW
DO08CH
PPDIST
10A
1A
1A
1A
1A
1A
1A
4A
10A
4A
4A
10A
8A

URP-SHIELD (PSHLD) - External Universal Shield Distribution

Items	Specification
Field Power Voltage	Norminal 24VDC
Field Power Contacts Current	-40°C to 50°C (-40°F to 122°F): Max. 10A 50°C to 70°C (122F to 158°F) : Max. 7A
Indicator	1 Green LEDs 1 Green Internal Bus State
System Power Dissipation	Max. 30mA @ 5VDC
Wiring	I/O Cable Max. 2.0mm^2 (AWG 14)
Weight	70g Max.
Module Size	12mm x 99mm x 70mm
Operating temperature	-40°C to 70°C (-40°F to 158°F)

1. Wiring Diagram

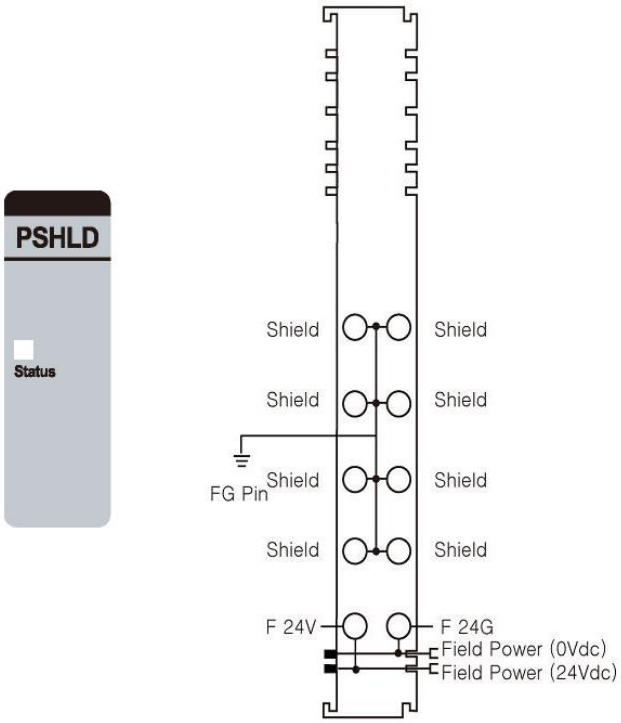

Pin No.	Signal Description	Pin No.	Signal Description
0	Shield	1	Shield
2	Shield	3	Shield
4	Shield	5	Shield
6	Shield	7	Shield
8	F 24V	9	F 24G

2. LED Indicators

LED No.	LED Function / Description	LED Color
Status	Internal Bus Status	Green

Status	LED	To indicate
Normal signal.	Green	The unit is operating in normal condition. (After normal initialization of internal communication, this LED maintains ON status.)
Absence of network adapter	Off	Network adapter is not connected to this module.

I/O Module Dimensions

1. I/O Module (10RTB)

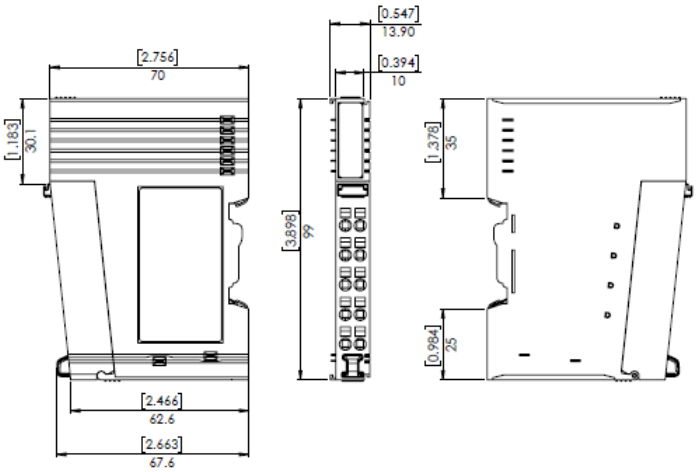

2. I/O Module (18RTB)

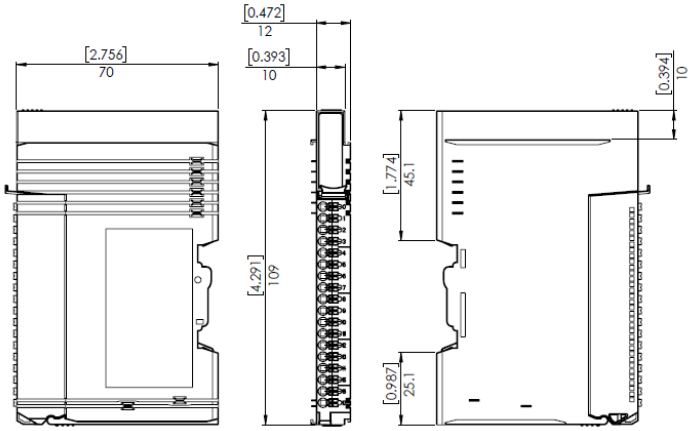

The information in this document reflects products at the date of printing. Unitronics reserves the right, subject to all applicable laws, at any time, at its sole discretion, and without notice, to discontinue or change the features, designs, materials and other specifications of its products, and to either permanently or temporarily withdraw any of the forgoing from the market.

All information in this document is provided "as is" without warranty of any kind, either expressed or implied, including but not limited to any implied warranties of merchantability, fitness for a particular purpose, or non-infringement. Unitronics assumes no responsibility for errors or omissions in the information presented in this document. In no event shall Unitronics be liable for any special, incidental, indirect or consequential damages of any kind, or any damages whatsoever arising out of or in connection with the use or performance of this information.

The tradenames, trademarks, logos and service marks presented in this document, including their design, are the property of Unitronics (1989) (R"G) Ltd. or other third parties and you are not permitted to use them without the prior written consent of Unitronics or such third party as may own them.